# VIKING INC.

Exhaust Parts Product Brochure

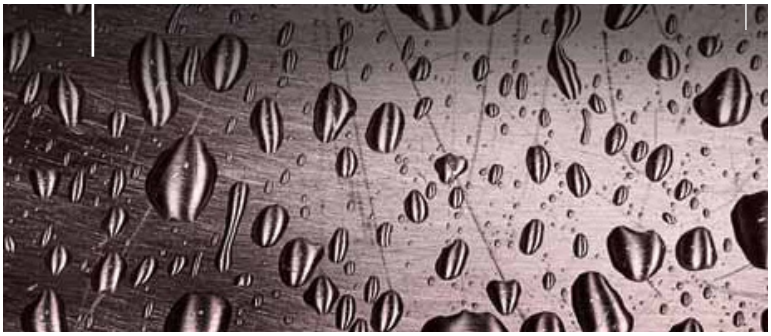

# VIKING INC.

## TABLE OF CONTENTS


ABOUT VIKING.....4-5
EXHAUST CLAMPS.....6-8
UNIVERSAL STRAPS.....8-11
UNIVERSAL HANGERS TABLE.....11
REDUCING BUSHING.....12
UNVIVERSAL HANGERS.....13-22
RUBBER INSULATORS.....23-24
METAL BRACKETS.....24
AMC RAMBLER.....25-29
AUDI.....29-30
BMW.....31-32
CHRYSLER PRODUCTS.....33-48
DATSUN-NISSAN.....49-53
FIAT.....54
FORD PRODUCTS.....55-79
GM PRODUCTS.....80-118
GEO.....119-121
HONDA.....122-123
HYUNDAI.....124
IHC.....124
INFINITY.....125
ISUZU.....125-128
JAGUAR.....128-129
JEEP.....129-131
LEXUS.....132
MERCEDES.....133-138
MG.....139
MITSUBISHI.....140-143
PEUGEOT.....144
PORSCHE.....144
RENAULT.....145
SAAB.....146-147
SUBARU.....148
SUZUKI.....149
THOMAS TRUCK.....149
TOYOTA.....150-153
TRIUMPH.....154
VOLKSWAGON.....155-157
VOLVO.....157-160
YUGO.....161

# Quality Exhaust Parts Since 1949

Viking Incorporated has been in business since 1949, providing excellent service to a wide range of clients. Our headquarters are in Columbia City, Indiana and we take pride in our local community.

Viking accommodates the largest aftermarket exhaust products in the U.S. Among our other top services are custom metal stamping, custom wire forming, and replacement supply.

Here at Viking it is our goal to deliver the highest quality products with the most competitive pricing available. Our friendly customer service will carry you through all the stages of your project.

# Specializing in:

- Custom Stamping
- Brackets
- Heat Sheilds

- Hangers
- Clamps
- Molded Rubber

# Exhaust Clamps

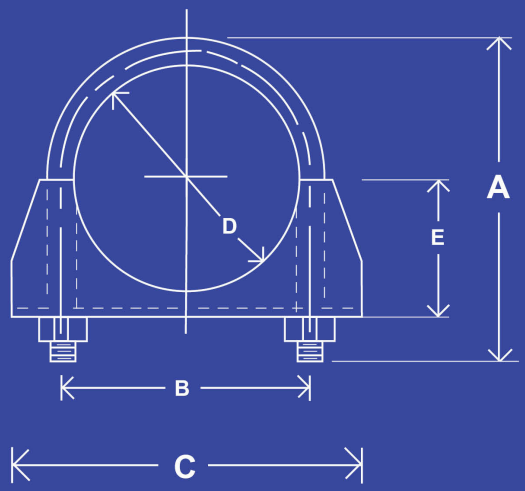


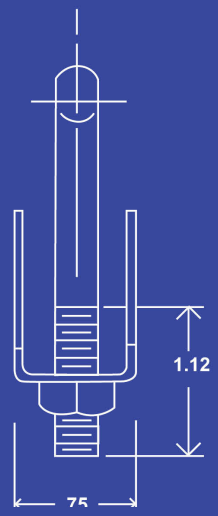


standard clamp

## Standard Clamps

| Size | A | B | C | D | E | GA |
|---|---|---|---|---|---|---|
| 1″ | 2.03 | 1.35 | 2.00 | 1.00 | .78 | 13 |
| 1-1/8″ | 2.45 | 1.52 | 2.25 | 1.25 | .88 | 13 |
| 1-1/4″ | 2.65 | 1.64 | 2.37 | 1.37 | .93 | 13 |
| 1-3/8″ | 2.70 | 1.77 | 2.50 | 1.50 | .98 | 13 |
| 1-1/2″ | 2.67 | 1.89 | 2.87 | 1.62 | 1.05 | 13 |
| 1-5/8″ | 2.75 | 2.02 | 2.87 | 1.75 | 1.10 | 13 |
| 1-3/4″ | 2.85 | 2.14 | 3.00 | 2.00 | 1.23 | 13 |
| 1-7/8″ | 2.93 | 2.27 | 3.00 | 2.00 | 1.23 | 13 |
| 2″ | 3.19 | 2.39 | 3.12 | 2.12 | 1.36 | 13 |
| 2-1/8″ | 3.33 | 2.52 | 3.37 | 2.25 | 1.37 | 13 |
| 2-1/4″ | 3.45 | 2.64 | 3.50 | 2.38 | 1.50 | 13 |
| 2-1/2″ | 3.60 | 2.89 | 3.75 | 2.62 | 1.63 | 13 |
| 2-34″ | 4.20 | 3.20 | 4.25 | 2.87 | 1.87 | 12 |
| 3″ | 4.37 | 3.55 | 4.50 | 3.13 | 2.00 | 12 |
| 3-1/4″ | 4.80 | 3.70 | 4.50 | 3.37 | 2.12 | 12 |
| 3-1/2″ | 4.95 | 3.95 | 5.00 | 3.63 | 2.25 | 12 |
| 3-3/4″ | 5.62 | 4.14 | 5.25 | 3.81 | 2.38 | 12 |
| 4″ | 5.75 | 4.46 | 5.50 | 4.12 | 2.45 | 12 |

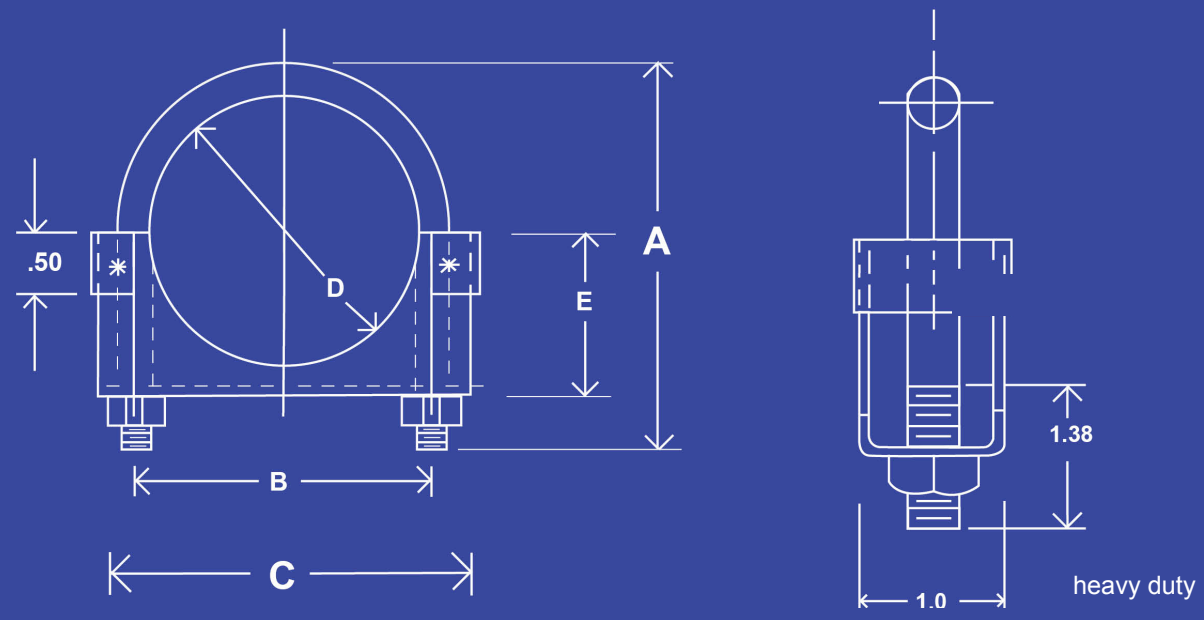


## Heavy Duty Clamps

| Size | A | B | C | D | E | GA |
|---|---|---|---|---|---|---|
| 2″ | 3.37 | 2.55 | 3.25 | 2.19 | 1.38 | 11 |
| 2-1/8″ | 3.56 | 2.675 | 3.375 | 2.32 | 1.65 | 11 |
| 2-1/4″ | 3.75 | 2.80 | 3.50 | 2.44 | 1.50 | 11 |
| 2-3/8″ | 3.82 | 2.93 | 3.625 | 2.57 | 1.70 | 11 |
| 2-1/2″ | 3.88 | 3.06 | 3.75 | 2.69 | 1.62 | 11 |
| 2-5/8″ | 4.04 | 3.13 | 4.00 | 2.78 | 1.75 | 11 |
| 1-3/4″ | 2.85 | 2.14 | 3.00 | 2.00 | 1.23 | 13 |

## Reinforced Heavy Duty Clamps

| | | | | | | |
|---|---|---|---|---|---|---|
| 2-34″ | 4.20 | 3.20 | 4.25 | 2.87 | 1.87 | 11 |
| 3″ | 4.37 | 3.55 | 4.50 | 3.13 | 2.00 | 11 |
| 3-1/4″ | 4.80 | 3.70 | 4.50 | 3.37 | 2.12 | 11 |
| 3-1/2″ | 4.95 | 3.95 | 5.00 | 3.63 | 2.25 | 11 |
| 3-3/4″ | 5.62 | 4.14 | 5.25 | 3.81 | 2.38 | 11 |
| 4″ | 5.75 | 4.46 | 5.50 | 4.12 | 2.45 | 11 |
| 4-1/2″ | 6.25 | 4.96 | 6.25 | 4.62 | 3.02 | 11 |
| 5″ | 6.75 | 5.50 | 6.75 | 5.12 | 3.25 | 11 |
| 5-1/2″ | 7.12 | 6.12 | 7.25 | 5.62 | 3.37 | 11 |
| 6″ | 8.00 | 6.50 | 7.75 | 6.12 | 3.68 | 11 |

# Air Tube Clamps

| Size | A | B | C | D | E | GA | |
|---|---|---|---|---|---|---|---|
| 1/2″ | 1.40 | .81 | 1.38 | .53 | .61 | 16 | 1/4-20 threads |
| 5/8″ | 1.60 | .90 | 1.51 | .68 | .63 | 16 | 1/4-20 threads |
| 3/4″ | 1.60 | 1.10 | 1.75 | .74 | .62 | 13 | 5/16-18 threads |
| 1″ | 2.03 | 1.35 | 2.00 | 1.00 | .78 | 13 | 5/16-18 threads |

# 11 GA No Hole Universal Strap

| Length | 90 Degrees |
|---|---|
| 5 1/2″ | 105590 |
| 7 1/2″ | 107590 |
| 9″ | 109090 |

# 11 GA 2 Hole Universal Strap

| Length | Straight | 90 deg. | Straight, No Hole |
|---|---|---|---|
| 2″ | 12200 | 12090 | 10200 |
| 3″ | 12300 | 12390 | 10300 |
| 4″ | 12400 | 12490 | 10400 |
| 4 1/2″ | 12450 | 124590 | 10450 |
| 5″ | 12500 | 12590 | 10500 |
| 5 1/2″ | 12550 | 125590 | 10550 |
| 5 3/4″ | 12575 | 1257590 | 105750 |
| 6″ | 12600 | 12690 | 10600 |
| 7″ | 12700 | 12790 | 10700 |
| 7 1/2″ | 12750 | 127590 | 107500 |
| 9″ | 12900 | 12990 | 10900 |
| 11″ | 121100 | 121190 | 101100 |
| 12 1/2″ | 121250 | 1212590 | 101250 |
| 14″ | 12140 | 121490 | 101400 |

# 11 GA 5 Hole Universal Strap

| Length | Straight | 90 degrees |
|---|---|---|
| 4 1/2″ | 15450 | 154590 |
| 5 1/2″ | 15550 | 155590 |
| 5 3/4″ | 15575 | 1557590 |
| 7″ | 15700 | 15790 |
| 7 1/2″ | 15750 | 157590 |
| 9″ | 15900 | 15990 |
| 11″ | 15110 | 151190 |
| 14″ | 15140 | 151490 |

# 11 GA 6 Hole Universal Strap

| Length | Straight |
|---|---|
| 6-11/16″ | 1611160 |

# 7 GA No Hole Universal Strap

| Length | Straight | 90 degrees |
|---|---|---|
| 4″ | 20400 | 204090 |
| 4 1/2″ | 20450 | 204590 |
| 7″ | 20700 | 207090 |
| 9″ | 20900 | 209090 |
| 11″ | 20110 | 201190 |
| 12″ | 20120 | 201290 |

# 7 GA 2 Hole Universal Strap

| Length | Straight | 90 degrees | Straight, No Hole |
|---|---|---|---|
| 4″ | 22400 | 22490 | 20400 |
| 4 1/2″ | 22450 | 224590 | 20450 |
| 5″ | 22500 | 22590 | 20500 |
| 5 1/2″ | 22550 | 225590 | 20550 |
| 5 3/4″ | 22575 | 225750 | 20575 |
| 6″ | 22600 | 22690 | 20600 |
| 7″ | 22700 | 22790 | 20700 |
| 7 1/2″ | 22750 | 227590 | 20750 |
| 8 7/8″ | 228750 | | |
| 9″ | 22900 | 22990 | 20900 |
| 11″ | 22110 | 221190 | 20110 |
| 12 1/4″ | 221250 | 2212590 | 20125 |
| 14″ | 22140 | 221490 | 20140 |

# 7 GA 5 Hole Universal Strap

| Length | Straight | 90 degrees |
|---|---|---|
| 4 1/2″ | 25450 | 254590 |
| 5 1/2″ | 25550 | 255590 |
| 7″ | 25700 | 257090 |
| 7 1/2″ | 25750 | 257590 |
| 9″ | 25900 | 259090 |

# Universal Hangers

## Round Truck Muffler Hangers with 12″ Strap

| | | |
|---|---|---|
| UTH-600 | 6″ | MUFFLER |
| UTH-700 | 7″ | MUFFLER |
| UTH-850 | 8 1/2″ | MUFFLER |
| UTH-900 | 9″ | MUFFLER |
| UTH-1118 | 11 1/8″ | MUFFLER |
| UTH-1000 | 10″ | MUFFLER |

## Oval Hangers with 10″ Strap

| | | |
|---|---|---|
| UTH-1180 | 11″ | MUFFLER |
| UTH-1500 | 15″ | MUFFLER |

## Truck Pipe Hangers 11ga Steel Clamp and Strap

| | | |
|---|---|---|
| T-200 | 2″ | PIPE |
| T-225 | 2 1/4″ | PIPE |
| T-250 | 2 1/2″ | PIPE |
| T-275 | 2 3/4″ | PIPE |
| T-300 | 3″ | PIPE |
| T-325 | 3 1/4″ | PIPE |
| T-350 | 3 1/2″ | PIPE |
| T-375 | 3 3/4″ | PIPE |
| T-400 | 4″ | PIPE |
| T-500 | 5″ | PIPE |

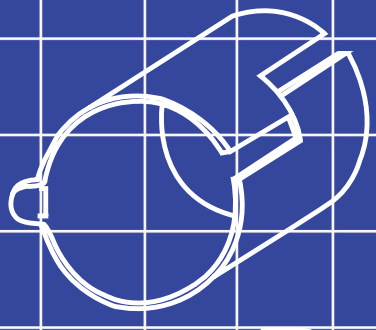

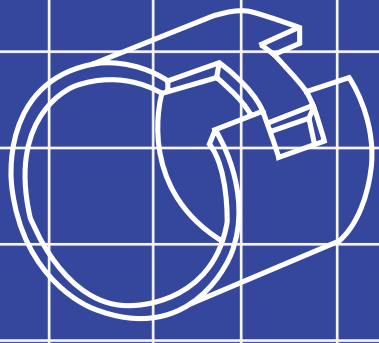

# Reducing Bushing

| | |
|---|---|
| U-59 | 1-3/8 TO 1-1/2 |
| U-60 | 1-1/2 TO 1-5/8 |
| U-61 | 1-5/8 TO 1-3/4 |
| U-62 | 1-3/4 TO 1-7/8 |
| U-63 | 1-7/8 TO 2 |
| U-64 | 2 TO 2-1/8 |
| U-65 | 2-1/8 TO 2-1/4 |
| U-66 | 2-1/4 TO 2-3/8 |
| U-67 | 2-3/8 TO 2-1/2 |
| U-68 | 2-1/2 TO 2-5/8 |
| U-69 | 2-5/8 TO 2-3/4 |
| U-70 | 2-3/4 TO 2-7/8 |
| U-71 | 2-7/8 TO 3 |
| U-72 | 2-1/4 TO 2-1/2 |
| U-73 | 2 TO 2-1/4 |
| U-74 | 1-1/2 TO 1-3/4 |
| U-75 | 1-9/16 TO 1-3/4 |

**DT-216**
Universal Hanger

**F-399**
Universal Hanger

**F-400**
Universal Hanger

**G-180**
Universal Hanger

**G-132 G-133**
Strap Mounting
Rubber Grommets

**HTX 20**
Universal Hanger

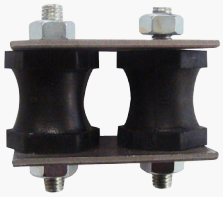

**TO-505**
Universal Hanger

**U-1000**
Universla Hanger

**U-1001**
**Universal Hanger**

**U-1002**
Universal Hanger

**U-1003**
Universal Hanger

**U-1004**
Universal Hanger

# Universal Hangers

**U-1005**
Universal Hanger
Available in Round of Slant
Oval Holes 6 5/8” Strap

**U-1006**
Universal Front
with 7/8” Hole Centers

**U-1009**
Universal Front
With 1/4” Hole

**U-1011**
Universal Hanger

**U-1012**
Universal Hanger

**U-1013**
Universal Hanger
3/8” Rubber

**U-1014**
Universal Hanger

**U-1015**
Universal Hanger

**U-1016**
Universal Hanger

**U-1017**
Universal Hanger

**U-1018**
Universal Hanger

**U-1019**
Universal Hanger

**U-1020**
Universal Muffler Hanger
Fits 1 1/2” to 2 1/4” Pipe

**U-1021**
Universal Hanger

**U-1025**
Universal Hanger
360 Degree Swivel

**U-1026**
Universal Hanger
360 Degree Swivel

**U-1027**
Universal Hanger
360 Degree Swivel

**U-1028**
Ford Universal Hanger

**U-1029**
Universal Hanger

**U-1030**
Universal Tail Pipe with
Bail. Fits 1 1/2” to 2 1/4”
6 5/8” Strap

**U-1031**
Universal Tail Pipe Hanger
Fits 1 1/4” to 2 1/4” Pipe
6 5/8” Strap

**U-1032**
Universal Hanger
9 1/4” Open

**U-1033**
Universal Hanger
Use with 1 1/4” to 2 1/2”
Saddle Clamp

**U-1034**
Universal Hanger
Use with 1 1/8” to 1 3/8”
Saddle Clamp

# Universal Hangers

**U-1035**
Universal Hanger
9 1/4” Closed

**U-1036**
Universal Hanger
10 1/2”

**U-1037**
Universal Hanger
9 1/4” Open

**U-1038**
HD Universal Hanger
With 5 1/4” Strap
360 Degree Swivel

**U-1039**
HD Universal Hanger
With 12” Strap
360 Degree Swivel

**U-1040**
Universal Hanger
17 1/4” Open

**U-1041**
Universal Hanger
13 1/4” Closed

**U-1042**
Universal Hanger
17 1/4” Closed

Image Coming Soon

**U-1043**
Universal Hanger

Image Coming Soon

**U-1044**
Universal Hanger

**U-1045**
Universal Hanger

**U-1046**
Universal Hanger
2 1/4” Pipe

**U-1047**
Universal Hanger
1 1/2” Pipe

**U-1048**
Universal Hanger
1 1/2” Pipe

**U-1049**
Universal Hanger
2 1/2” Pipe

**U-1052**
Band Clamp 1” Diameter

**U-1053**
Universal Muffler Hanger
Double Clamp Fits 1
1/4” to 2 1/2” Pipes

**U-1050**
Band Clamp 1 1/4” Diameter

**U-1051**
Band Clamp
7 1/8” Diameter

**U-1054**
Universal Hanger
American MTR 69-77 Bobcat,
Pinto 75-80 Pontiac 71-72

**U-1055**
Band Clamp
2 1/4” Diameter

**U-1056**
Universal Hanger Adjustable
2 1/4” to 5” Length use with
Saddle Clamp

**U-1057**
Universal Hanger
Adjustable
2 1/2” to 5” Length

**U-1058**
Universal Muffler Hanger

# Universal Hangers

**U-1059**
Back Plate 1 3/8” x 1 1/16”
With 5/16” Hole

**U-1060**
Ford Universal Hanger

**U-1061**
Back Plate 1” x 1 3/4”
with 5/16” Hole

**U-1064**
Universal Hanger

**U-1065**
Universal Bracket

**U-1062**
Back Plate 1” x 2 1/8”
with 1” Oval Hole Centers

**U-1063**
Band Clamp 4 1/8” Diameter

**U-1066**
Universal Hanger
Adjustable
use with Saddle Clamp

**U-1067**
Universal Front 1”
Hole Centers

**U-1068**
Universal Hanger
Adjustable
Use with Saddle Clamp

**U-1069**
Universal Hanger

**U-1070**
Universal Hanger

**U-1071**
Universal Hanger

**U-1072**
Universal Hanger

**U-1076**
Universal Hanger

**U-1077**
Universal Hanger

**U-1078**
Universal Hanger

Image Coming Soon

**U-1079**
Universal Hanger

Image Coming Soon

**U-1080**
Universal Hanger

Image Coming Soon

**U-1081**
Universal Hanger

**U-1082**
Universal Hanger

**U-1083**
Universal Hanger

Image Coming Soon

**U-1085**
Universal Hanger

Image Coming Soon

**U-1088**
Universal Hanger

**U-1091**
Universal Hanger

**U-1092**
Universal Hanger

**U-1094**
Universal Hanger

**U-1096**
Universal Hanger

**U-1097**
Universal Hanger

**U-1098**
Universal Hanger

**U-1099**
Universal Hanger

**U-1100**
360 Degree Swivel Hanger

**U-1101**
360 Degree Swivel Hanger

Image Coming Soon

**U-1102**
Universal Hanger

**U-1103**
Speed Hanger
Use with Saddle Clamp

**U-1104, 05, 06**
3/8” Wire hangers
Weld on Application
For O-Ring Insulators

**U-1107, 08, 09**
3/8” Wire Hangers
Weld on Application
For Solid Block Insulators

**U-1111**
Converter Hanger

**U-1113**
Universal Hanger
zinc 14”

**U-1114**
14” Universal Hanger

**U-1115**
3/8” x 1
15/16” x 6 3/16”

**U-1116**
3/8” X 1
1/8” X 7 5/8”

**U-1117**
3/8” X 1
1/8” X 6 1/8”

Image Coming Soon

**U-1118**
1/2” x 1
15/16” x 6 9/32”

**U-1119**
Universal Hanger
1/2” x 1” x 7 1/2”

**U-1120**
Universal Hanger
7/16” x 10”

Image Coming Soon

**U-1121**
Universal Hanger

**U-1122**
Universal Hanger
3/8” x 9 1/2”

**U-1123**
Universal Hanger
3/8” x 4”

Image Coming Soon

**U-1124**
Universal Hanger

**U-1125**
Universal Hanger
1/2” x 1” x 6 1/2”

**U-1126**
Universal Hanger
1/2” x 1” x 8”

**U-1127**
Universal Hanger
1/2” x 1” x 6”

Image Coming Soon

**U-1128**
Universal Hanger

**U-1130**
Universal Hanger

**U-1131**
Universal Hanger

**U-2000**
Universal Weather Shield
1 1/2” to 3 1/4” Pipe

**U-4500**
Universal Wheather Shield
Fits 3 1/2” to 4 1/2” Pipe

**UTH-33**
Universal Truck Hanger Fits
2 1/2” to 4” Pipe
12” Strap

**UTH-35**
Universal Truck Hanger
360 Degree Swivel 12” Strap
Fits 2 3/4” to 4 1/2” Pipe

**UTH-40**
Universal School Bus Hanger
Long Pipe Application

**UTH-50**
Universal Truck Vertical
Exhaust Cab Mount

**UTH-51**
Universal Truck
Muffler Hanger
Fits 6” TO 9” Mufflers

**UTH-52**
Heavy Duty Truck
Muffler Hanger
Fits 6 to 9” Mufflers

Image Coming Soon

**VO-403**
Universal Hanger

**G-80**
Rubber Insulator

**G-91**
Rubber Insulator

**G-92**
Rubber Insulator

**G-105**
Rubber Insulator

**G-106**
Rubber Insulator

**G-110**
Rubber Insulator

**G-114**
Rubber Insulator

**G-121**
Rubber Insulator

**G-142**
Rubber Insulator

**G-147**
Rubber Insulator

**G-148**
Rubber Insulator

**G-167**
Rubber Insulator

**G-178**
Rubber Insulator

**G-189**
Rubber Insulator

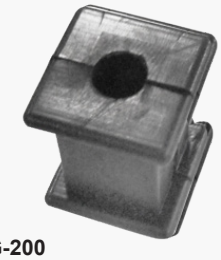

**G-200**
Rubber Insulator

**C-234**
Muffler Straps

**C-246**
Muffler Straps

**C-280**
Muffler Straps

# AMC Rambler

**R-811**

Original No: 3175604

Application: American Motors

Year: 70-88

**R-812**

Original No: 3171182

Application: American Motors

Year: 63-66

**R-813**

Original No: 3185261

Application: American Motors

Year: 67-70

**R-814**

Original No: 3190063

Application: American Motors

Year: 68-74

**R-815**

Original No: 3190065

Application: American Motors

Year: 67-74

**R-816**

Original No: 3188860
S/A 3194558

Application: American Motors

Year: 67-78

# AMC Rambler

**R-817**

Original No: 3170892

Application: American Motors

Year: 63-64

**R-818**

Original No: 3174573

Application: American Motors

Year: 64-69

**R-819**

Original No: 3172214

Application: American Motors

Year: 64-69

**R-820**

Original No: 3170877

Application: American Motors

Year: 64-69

**R-821**

Original No: 3172223

Application: American Motors

Year: 64-69

**R-822**

Original No: 3196980

Application: American Motors

Year: 70-73

# AMC Rambler

**R-825**

Original No: 3197161

Application: American Motors

Year: 71-77

**R-826**

Original No: 3220335

Application: American Motors

Year: 73-88

**R-827**

Original No: 3225262

Application: American Motors

Year: 75-79

**R-828**

Original No: 3219675

Application: American Motors Year: 70-73

Application: Spirit, AMX Year: 79-83

Application: Pacer Year: 75-79

Application: Hornet, Gremlin Year: 72-78

Application: Eagle Year: 81-88

**B-626**

Original No: 1199165

Application: American Motors

Year: 74-78

**B-632**

Original No: 3223863

Application: American Motors

Year: 74-78

# AMC Rambler

**F-345**

Original No:

Application: American Motors Year: 1978

Application: Spirit Year: 79-80

Application: Hornet Year: 75-77

Application: Eagle Year: 80-87

Application: Concord Year: 78-83

**O-559**

Original No:

Application: Pacer

Year: 75-80

**U-1054**

Original No: Universal

Application: American Motors

Year: 69-77

**B-632**

Original No: 3223863

Application: American Motors

Year: 74-78

**F-345**

Original No:

Application: American Motors Year: 1978

Application: Spirit Year: 79-80

Application: Hornet Year: 75-77

Application: Eagle Year: 80-87

Application: Concord Year: 78-83

**O-559**

Original No:

Application: Pacer

Year: 75-80

# AMC Rambler

**U-1054**

Original No: Universal

Application: American Motors

Year: 69-77

**U-1065**

Original No:

Application: AMC

Year: 64-78

# Audi

**G-80**

Original No: 9030136001

Application: Audi 200 Year: 1989

Application: Audi 100 Sedan Year 92-93

**G-174**

Original No: 447253149

Application: Audi-Buffer

# Audi

**G-189**

Original No:

Application: Audi Quatro Year: 88-92

Application: 5000 Year: 78-88

Application: 4000

**G-112**

Original No: 823253147A

Application: Audi Fox Year: 73-91

Application: Audi 4000 Year: 80-83

Application: Audi 5000 Year: 73-89

**G-118**

Original No: 94222502

Application: Audi 5000

Year: 84-87

# BMW

**G-174**

Original No: 447253149

Application: Audi-Buffer

**G-189**

Application: Audi Quatro Year: 88-92

Application: 5000 Year: 78-88

Application: 4000 S, SC Year: 85-87

Application: 4000 Year: 80-88

Application: 200 Sedan, 100 Year: 89-91

Application: 100 LS, 100, 100 CL Year: 70-78

Application: 100 Series Year: 92-94

Application: Fox Year: 73-79

**BM-600**

Original No: 18211175518

Application: BMW 3201

Year: 77-83

**BM-601**

Original No: 18201176178

Application: BMW 3201

Year: 84-85

Original Number:
W/18211176029

**BM-602**

Original No: 18211170807

Application: BMW 3201

Year: 84-87

**BM-604**

Original No: 1812117847

Application: BMW

Year: 85-87

# BMW

**G-80**

Original No: 9030136001

Application: BMW 3201

Year: 77-83

**G-81**

Original No: 11249202082

Application: BMW

Year: 77-83

**G-95**

Original No: 667503

Application: BW 3021

Year: 79-81

**G-11**

Original No: 1821105638

Application: BMW

Year: 68-95

**G-126**

Original No: 18211245985

Application: BMW

Year: 78-95

**G-171**

Original No: 18211723646

Application: BMW

Year: 83-92

# Chrysler Products

**D-738**

Original No: 2200414
Application: Desota, Dodge, Chrysler

Original No: 2123442
Application: Plymouth
Year: 60-61

**D-739**

Original No: 2123446

Application: Chrysler, Dodge

Year: 60-61

**D-741**

Original No: 2073794

Application: Dodge Dart, Valiant
Year: 70-73

Application: Baracuda Year: 65-69

Application: Dodge Year: 41-73

Application: Plymouth Year: 42-73

**D-742**

Original No: 2203915

Application: Dodge Year: 70-73

Application: Dodge Dar Year: 1962

Application: Plymouth Year: 62-66

**D-743**

Original No: 2203909

Application: Chrysler Year: 62-66

Application: Dodge Year: 62-65

Application: Dodge Dart Year: 1962

Application: Plymouth Year: 62-66

**D-744**

Original No: 2203677
Application: Chrysler Year: 60-66

Original No: 2823497
Application: Dodge Year: 60-70

Original No: 2823452
Application: Plymouth Year: 65-70
Application: Barracuda Year: 65-69

# Chrysler

**D-746**

Original No:  2203965
Application:  Dodge Year: 65-70

Oiginal No: 2823456
Application: Chrysler  Year: 65-70

Original No: 2461754
Application: Plymouth  Year; 65-70

Original No:  2203966

Original No: 2823458

**D-747**

Original No:  2266971
Application: Dodge Dart Year: 63-66

Oiginal No: 2823450
Application: Valiant  Year: 63-66

Oirinal No: 2460845
Application: Barracuda  Year: 65-66

**D-749**

Original No:  2530091

Application:  Plymouth Sta. Wag.

Year:  1965

**D-750**

Original No:  2530093

Application:  Chrysler, Dodge, Plymouth, Sta. Wag.

Year:  1965

**D-752**

Original No:  2530062
Application: Chrysler, Dodge
Year:  65-70

Original No: 2660436
Application: Plymouth
Year: 65-70

**D-753**

Original No:  2823929

Application:  Chrysler, Dodge, Plymouth

Year:  67-73

# Chrysler

**D-754**

Original No: 2925795
Application: Chrysler, Dodge, Plymouth Year: 1969

Original No: 3404851
Application: Dodge Truck D300
Year: 1972

**D-755**

Original No: 2823462
Application: Barracuda Year: 65-69

Original No: 2883873
Application: Chrysler Year: 60-66

Application: Dart, Valiant Year: 62-76

Application: Dodge Year: 60-70

Applicatoin: Plymouth Year: 65-70

**D-756**

Original No: 2856363
Application: Dodge

Application: Dodge dart, Valiant

Application: Plymouth Sta. Wag
Year: 68-69

**D-757**

Original No: 2856238

Application: Chrysler, Dodge

Year: 67-73

Application: Plymouth

**D-758**

Original No: 2823927

Application: Chrysler, Dodge, Plymouth

Year: 67-73

**D-759**

Original No: 2823933

Application: Chrysler, Dodge, Plymouth

Year: 67-73

# Chrysler

**D-761**

Original No: 3404930
Application: Barracuda, Challenger
Year: 70-73

Original No: 3404931

Original No: 3404932

**D-762**

Original No: 3466181

Application: Barracuda, Challenger

Year: 70-71

**D-763**

Original No: 3404844
Application: Chrysler Imperial
Year: 70-73

Application: Dodge & Plymouth
Year: 70-74

**D-764**

Original No: 3466057

Application: Chrysler, Dodge, Plymouth

Year: 71-89

**D-766**

Original No: 3466060
Application: Chrysler, Imperial
Year: 70-73

Original No: 3404943
Application: Dodge, Plymouth
Year: 70-74

**D-767**

Original No: 3466646
Application: Chrysler
Year: 72-73

Application: Dodge, Plymouth, Imperial
Year: 71-73

Application: Dodge Truck “D”
Year: 76-77

# Chrysler

**D-768**
Original No: 3466191
Application: Barracuda, Chall. Year: 72-74

Application: Dodge & Plymouth
Year: 71-74

Application: Dodge Crew Cab
Year: 72-77

**D-769**
Original No: 2239565
Application: Dodge Truck
Year: 69-81

Application: Plymouth Truck

Application: Van and Wagon
Year: 74-81

**D-770**

Original No: 3497444
Application: Dodge Truck “B”
Year: 70-77

Application: Plymouth Truck

Application: Van & Wagon
Year: 74-78

**D-771**

Original No: 3642510

Application: Chrysler, Dodge, Plymouth

Year: 1974

**D-772**

Original No: 4004035

Application: Dodge & Plymouth
Year: 75-80

Application: Chrysler

**D-773**

Original No: 4004037
Application: Dodge
Year: 75-76

Application: Plymouth
Year: 75-79

# Chrysler

**D-774**

Original No: 3818291
Application: Chrysler, Dodge
Year: 75-78

Original No: 40004355
Application: Plymouth
Year: 75-80

**D-775**

Original No: 3641271
Application: Dodge Truck D100
Year: 73-88

Application: 200,300, Club Cab

**D-776**

Original No: 3466652
Application: Chrysler, Dodge, Plymouth Year: 74-78

Application: Cordoba Year: 75-76

Application: Dodge Truck Year: 79-93

Application: Plymouth Truck Year: 79-86

Application: Imperial Year: 1975

**D-777**

Original No: 4004270
Application: Dodge Aspen
Year: 76-80

Application: Plymouth

**D-778**

Original No: 3404852
Application: Dodge Aspen
Year: 76-80

Application: Plymouth Sta. Wag.

**D-779**

Original No: 3642535
Application: Aspen, Volare
Year: 75-80

Original No: 3642534
Application: Chrysler, Cordoba
Year: 75-87

Original No: 3642539
Application: Diplomat, Lebaron
Year: 77-83

Original No: 3726888
Application: Imperial Year: 74-83

# Chrysler

**D-780**

Original No: 3893401
Application: Dodge, Plymouth
Year: 70-92

Application: Truck B Series

**D-781**

Original No: 3642540
Application: Dodge, Plymouth
Year: 74-78

Application: Station Wagon

**D-782**

Original No: 4089650
Application: Dodge, Plymouth
Year: 78-92

Application: Truck, Ram Charger, Trail Duster, D&W

**D-783**

Original No: 4030398
Application: Dodge, Plymouth
Year: 78-92

Application: Truck, Ram Charger

Application: Trailblazer, D&W

**D-784**

Original No: 5217115
Application: Omni, Horizon, Aries
Year: 78-90

Application: Lebaron

Application: Dodge Truck
Year: 82-90

Application: Plymouth Caravelle
Year: 81-90

**D-785**

Original No: 4004940
Application: Volare, Aspen, Lebaron Year: 1979

Application: Diplomat

# Chrysler

**D-786**

Original No: 4167426
Application: Dodge, Plymouth Truck
Year: 70-73

Application: B-100, 318 w/o Comp

**R-822**
Original No: 4004742 Application: Chrysler, Cordoba
Year: 79-89

Application: New Yorker
Application: Newport, St. Regis Year: 79-81
Application: Fifth Ave, Imperial Year: 81-89
Application: Dodge Aspen, Volare Year: 78-89
Application: Plymouth Champ, Grand Fury Yr: 79-89
Application: Diplomat, Mirage Year: 78-89
Application: Magnum XE Year: 79-81
Application: 5th Ave Year: 82-89

**D-788**
Original No: 4131336
Application: Dodge Aires 400, 600, Reliant Year: 81-7

Application: Omni 024 Charger
Year: 78-87

Application: Chrysler Lebaron E
Year: 82-87

Application: Plymouth Horizon TC3
Year: 78-87

**D-789**

Original No: 4150333
Application: Chrysler Lebaron E
Year: 82-87

Application: Dodge Aires 400

Application: Plymouth Reliant
Year: 81-87

**D-790**

Original No: 4105798

Application: Chrysler Lebaron GTS
Year: 84-95

Application: New Yorker, Imperial, Dodge

Application: Daytona, Dynasty, Lancer Shadow

Application, Spirit, Plymouth Acclaim

**D-791**

Original No: 4218199
Application: Dodge Dakota
Year: 87-93

Application: Dodge, Plymouth Van & Wagon
Year: 89-93

# Chrysler

**D-791**
Original No: 4218166
Application: Dodge, Plymouth Truck
Year: 86-94

Original Number: 4218328
Application: Dakota, Ram Charger, Trail

Original Number: 4218243
Application: Duster, W250

**D-793**

Original No: 4218377

Application: Pickup

Year: 85-87

Image Coming Soon

**D-794**

Original No: 4218126

Application: Pickup

Year: 85-87

**D-795**

Original No: 4301333

Application: Mini Van

Year: 85-87

**D-796**

Original No: 6500202

Application: Stud Used with G-88 & D-790

Year: 78-95

**D-797**

Original No: 4495306

Application: Dodge Caravan, Plymouth Voyager

Year: 90-94

# Chrysler

Image Coming Soon

**D-798**

Original No: 5217003
Application: Dodge
Year: 80-92

Application: Chrysler
Year: 82-92

Application: Plymouth
Year: 85-92

**D-799**

Original No: 1061
Application: Dodge D-W 250
Year: 87-92

Application: 350 Pickup

**D-800**

Original No: 4427010

Application: Caravan, Town& Country, Voyager, Ram Van

Year: 87-93

Image Coming Soon

**D-801**

Original No: T1458596

Application: Eagle Medallion

Year: 88-89

**C-209**

Original No: MB-111800
Application: Dodge Colt
Year: 85-88

Original No: 25501936
Application: Plymouth Colt
Year: 85-91

**C-189**

Original No: 3997259

Application: Dodge truck Raider

Year: 87-88

# Chrysler

**C-196**
Original No:  534550
Application:  Chrysler Imerial
Year:  81-87

Original No: 537205
Application: Chrysler Diplomat,
Year: 84-89

Application: Plymouth Dodge
Year: 1981

Application: Imperial Plymouth
Year: 71-89

**C-221**

Original No:  25511783

Application:  Dodge Plymouth
Van and Pickup

Year:  80-91

**C-232**
Original No:  10041737
Application:  Chrysler Mini Van
Year:  87-94

Application: Dodge Caraven
Year: 91-94

Application: Plymouth Voyager

**C-235**
Application:  Plymouth Grand
Fury
Year:  84-86

Application: Dodge Diplomat
Year: 84-86

Application: Chrysler 5th Ave
Year: 84-86

**C-236**
Application:  Plymouth volare
Year:  76-80

Appliation: Fury
Year: 80-89

Application: Dodge Aspen, Diplomat,
Miranda
Year: 76-89

Application: Lebaron
Year: 77-81

**C-253**

Original No:  529075

Application:  Chrysler, Dodge,
Plymouth

Year:  82-97

# Chrysler

**F-317**

Application: Chrysler, Imperial, Plymouth Full size, Dodge Full Size
Year: 67-74

Application: Chrysler Full Size
Year: 67-71

Application: Plymouth Duster
Year: 70-74

Application: Dodge Dart
Year: 67-70

Application: Dodge, Plymouth Truck W250, D-300, W-300, D-350, W-350
Year: 79-86

Appliation: W-100
Year: 82-86

Application: PB-250, B-300, PB-300 D-100, D-150, W-150, D-200, D-250, B-100, PB-200, B-250 Year: 79-88

Application: Dodge & Plymouth, Truck B-350, PB-350
Year: 80-86

Application: AD-150, PD-150, AW-150, AW-150, PW-150
Year: 81-83

Application: AD-100, PD-100
Year: 1980

Application: CB-400, MB-400
Year: 79-81

Application: CB-450, MB-300, CB-350, MB-350, CB-450, MB-450
Year: 80-81

**DT-201**

Original No: 20641U6810
Application: Dodge, Plymouth
Year: 89-91

Application: Van and Wagon

**TO-502**

Application: Dodge & Plymouth, Truck, Caravan, Voyager

Year: 84-86

**U-1070**

Original No: Universal
Application: Dodge, Plymouth Pickup, Van & Wagon
Year: 80-81

Application: dodge Truck M Series Motor Home
Year: 74-77

**G-80**

Original No: 852711
Application: Eagle Talon, Plymouth Laser
Year: 90-94

Application: Dodge Colt
Year: 75-90

# Chrysler

**G-81**

Original No: 4422885

Application: Dodge Colt

Year: 75-79

**G-84**

Application: Eagle Premier

Year: 88-92

**G-88**

Original No: 5217133
Application: Shadow, Spirit, Sundance, Acclaim, Aires & Reliant Year: 87-90

Application: Aires E Class, Lebaron Reliant 400, 600
Year: 82-90

Application: Caravelle, Lancer
Year: 85-86

**Application: Charger, Horizon, Omni**
**Year: 82-90**

**Application: Turismo Dynasty E Class, Lebaron, New Yorker, Spirit**
**Year: 88-90**

**Application: Datona, Laser, Horizon**
**Year: 84-90**

**Application: Omni, Rliant**
**Year: 78-81**

**Applicatoin: Dodge Truck, Rampage**
**Year: 82-84**

**Application: Shelby Charger**
**Year: 85-87**

**G-89**
**Original No: 5217108**
**Application: Breeze**
**Year: 96-97**

**Application: Acclaim, Shadow, Spirit, Sundance**
**Year: 87-95**

**Application: Aires, Reliant**
**Year: 87-94**

**Application: Aires E Class, Lebaron, Reliant 400, 600**
**Year: 82-95**

**Application: Caravelle, Lancer**
**Year: 85-88**

**Application: Charger, Horizon, Omni**

**Application: Turismo**
**Year: 82-94**

**Application: Chrysler 5th Ave Year: 82-94**

**Application: Dynast E Class, Lebaron Year: 87-93**
**Application: Dynasty E Class, Lebaron, New Yorker, Spirit Year: 88-95**

**Application: Daytona, Laser, Horizon, Turismo Year: 84-93**

**Application: Dodge Truck Rampage Year: 82-86**

**Application: Horizon, Omni, Reliant Year: 78-81**

**Application: Shelby Charger**
**Year: 82-93**

**Application: Dodge Stratus, Chry. Cirrus Year: 95-96**

# Chrysler

**G-90**

Original No: MB-009776
Application: Conquest
Year: 85-89

Application: Arrow Year: 76-80

Application: Colt Year: 73-79

Application: Chrysler Cirrus
Year: 96-97

**G-91**

Original No: MB-059522
Application: Eagle Talon
Year: 90-94

Application: Challenger, Sapporo
Year: 78-83

Application: Champ. Colt
Year: 81-91

Application: Plymouth Laser
Year: 90-94

**G-106**
Original No: MB-059936
Application: Colt Year: 79-96

Applicatoin: Eagle Talon, Plymouth Laser Year: 90-96

Application: Dodge Ram
Year: 87-94

**G-1114**

Original No: 2064001A01
Application: Champ, Colt, Vista
Year: 87-91

Application: Dodge colt Hatchback
Year: 89-92

Application: Eagle Talon Year: 89-94

Application: Plymouth Laser
Year: 90-94

**G-121**
Application: Plymouth Vista
Year: 93-94

Application: Plymouth Laser
Year: 90-94

Application: Dodge Colt
Year: 87-96

Application: Eagle Year: 88-96

Application: Plymouth Colt Year: 87-96

**G-123**

Original No: 89320011396

Application: EAgle Medallion

Year: 88-89

# Chrysler

**G-124**

Original No: 770067733

Application: EAgle Medallion

Year: 88-89

Image Coming Soon

**G-137**

Original No: MB014502

Application: Colt, Clamp

Year: 85-91

**G-138**

Original No: MB431175
Application: Dodge, Plymouth Dakota Dodge Truck D50 Pickup
Year: 70-73

Application: dodge Truck D50 Pickup Year: 88-94

**G-150**

Original No: 20655001B01
Application: Dodge, Plymouth Dakota
Year: 70-7

Application: Dodge Truck Ramcharger
Year: 92-93

Application: Eagle Summit Year: 89-91

Application: Eagle Talon Year: 90-93

**G-152**

Original No: MB48707
Application: Dodge, Plymouth Dakota Year: 90-91

Application: Dodge Truck D50 Pickup
Year: 88-92

**G-154**

Original No: 9365404

Application: Dodge Monaco

Year: 89-92

# Chrysler

**G-155**
Application: Chrysler Concord
Year: 93-97

Application: Eagle Vision
Year: 93-97

Application: Dodge Intrepid
Year: 93-97

Application: Chrysler New Yorker
Year: 94-96

Application: ChryslerLHS Year 94-97

**G-156**

Original No: 32002319

Application: Eagle Premier,
Dodge Monaco

Year: 88-92

**G-179**
Original No: MB514063
Application: Dodge, Plymouth
Dakota Year: 90-94

Application: Dodge Truck
Pickup Year: 88-92

Application: Plymouth Colt,
Eagle Summit
Year: 92-94

**G-121**

Original No: 17565-15010

Application: Diahatsu Charade

Year: 88-92

# Dihatsu/Nissan

**G-121**

Original No: 17565-15010
Application: Diahatsu Charade
Year: 88-92

Image Coming Soon

**DT-200**
Original No: 20231-M7000
Application: Datson 200
Year: 80-84

Application: SX 510
Year: 80-84

Application: Datsun 210
Year: 79-84

Application: Datsun 310
Year: 81-82

**DT-201**

Original No: 20641-U6810
Application: Datsun
Year: 68-89

Application: 310, 510, 810

Application: Datsun 310, F10
Year: 81-82

Application: Datsun, Nissan Truck
Year: 75-92

Application: Nissan Pathfinder
Year: 90-94

Image Coming Soon

**DT-202**

Original No: 20636-P7100
Application: Datsun 240 ZX
Year: 79-89

Application: Datsun 810 Maxima
Year: 81-84

**DT-203**

Original No: 20635-N4202

Application: Datsun Z Car

Year: 75-78

**DT-205**

Original No: 20651-W1200

Application: Nissan 810 Maxima

Year: 81-84

# Datsun/Nissan

**DT-206**

Original No: 2010029R70175

Application: Nissan Stanza Station Wagon

Year: 86-87

**DT-207**

Original No: 2072253A10

Application: Nissan Sentra, Pulsar

Year: 87-90

Image Coming Soon

**DT-208**

Original No: 2010029R70175

Application: Nissan Stanza Station Wagon

Year: 88-89

Image Coming Soon

**DT-209**

Original No: 20652-A4601

Application: Datsun 510

Year: 68-73

Image Coming Soon

**DT-211**

Original No: 20100-04A11

Application: Nissan Stanza

Year: 86-87

Application: Maxima
Year: 85-94

Image Coming Soon

**DT-212**

Original No:

Application: Datsun 200SX
Year: 82-83

Application: Datsun Pickup
Year: 81-86

# Datsun/Nissan

Image Coming Soon

**DT-213**

Original No:

Application: Nissan Maxima
Year: 86-88

Application: Nissan Stanza
Year: 86-89

Image Coming Soon

**DT-214**

Original No:

Application: Nissan Pickup

Year: 86-94

**C-196**

Original No:

Application: Datsun Wagon

Year: 74-76

**C-215**

Original No: 94023911

Application: Datsun 810 Sedan

Year: 79-80

**U-1065**

Original No:

Application: Datsun 26OZ

Year: 73-79

**G-80**

Original No: 20630-18000
Application: Datsun 200 SX
Year: 81-84

Application: Datsun 210, B210, 1200
Year: 71-82

Application: 310, 510, 710

Application: Datsun, Nisan 810 Maxima
Year: 81-84

# Datsun/Nissan

**G-81**

Original No: 1124920282

Application: Nissan 200 SX

Year: 85-89

**G-86**

Original No: 20137-27160

Application: Datsun Pickup

Year: 69-74

**G-91**

Original No: 90301-33001
Application: Datsun 200SX
Year: 80-89

Application: DAtsun 810 Maxima
Year: 81-84

**G-110**

Application: Datsun
Year: 83-86

**G-106**
Original No: MB059936
Application: Nissan 810 Maxima
Year: 89-94

Application: Nissan Sentra
Year: 89-96

Application: Nisan Stanza
Year: 91-97

Application: Nissan Datsun Pickup
Year: 90-92

Application: Nissan, Datsun, Maxima
Year: 87-95Application: Nissan, Datsun, Pulsar, NX
Year: 89-94

Application: Sentra, Stanza, 240 SX
Year: 87-93

Application: Nissan, Datsun Sentra
Year: 89-91

# Datsun/Nissan

**G-113**

Original No: 20650-D0100
Application: Datsun, Nissan
Year: 82-89

**G-114**

Original No: 20640-01A01
Application: Datsun, Nissan
Year: 82-92

Application: Nissan Pickup
Year: 88-97

**G-115**

Original No: 111440161

Application: Datsun, Nissan Maxima

Year: 86-88

**G-150**

Original No: 20650-01B01

Application: Datsun, Nissan Trucks

Year: 89-94

**G-121**

Original No: 20650-01B01
Application: Altima
Year: 1995

Applicatoin: 200 SX, Sentra
Year: 95-97

Application: Nissan
Year: 86-94

Application: Pathfinder Truck
Year: 96-97

Application: 300ZX
Year: 95-96

# Fiat

**G-82**

Application: Fiat Strada

Year: 79-82

**G-84**

Application: Fiat Strada

Year: 79-82

**G-119**

Original No: 4112293

Application: Fiat 124 Spider

Year: 71-78

**G-128**

Original No: 4135378
Application: Fiat 128
Year: 68-81

Original No: 4296059
Application: Fiat 124
Year: 68-82

Original No: 4297082

Original No: 4312280

# Ford Products

**F-270**

Original No: C5ZZ-5A246A

Application: Ford Mustang (All Models)

Year: 65-67

**F-274**

Original No: C5AZ-5260A
Application: Ford, Mercury
Year: 65-68

Original No: C5AZ-5260K
Application: Montego, Torino
Year: 72-73

**F-277**

Original No: C60Z-5260G
Application: Ford Fairlane
Year: 66-67

Original No: C70Z-5260A
Application: Mercury Comet

**F-278**

Original No: C60Z-5260A
Application: Montego, Torino
Year: 70-71

Original No: C60Z-5260B
Application: Comet Fairlane
Year: 1966

Original No: D00z-5260C

**F-281**

Original No: C7AZ-5260A
Application: Ford Mercury
Year: 67-68

Original No: D5VY-5260D
Application: Lincoln Mark III, Thunderbird
Year: 69-71

Application: Lincoln
Year: 75-78

**F-282**

Original No: C7DZ-5260-A

Application: Falcon

Year: 67-70

# Ford Products

**F-283**

Original No: C8ZZ-5260B
Application: Mustang, Cougar
Year: 68-73

Original No: D0ZZ-5260C
Original No: D1ZZ-5260B
Original No: D1ZZ-5260A
Original No: D1ZZ-5260E

**F-285**

Original No: C9AZ-5260A
Application: Ford, Mercury
Year: 69-78

Original No: D0VY-5260B
Application: Lincoln
Year: 70-79

Original No: D5VY-5260F

**F-286**

Original No: C9AZ-8590D
Application: Ford Mercury
Year: 69-74

Original No: C9AZ-5260F
Application: Ford Mercury
Year: 77-78

Original No: D0AZ-5260A&B
Original No: D4AZ-5260A&C
Original No: D5AZ-5260D, E&H

**F-287**

Original No: C8ZZ-5260C

Application: Mustang

Year: 68-70

**F-288**
Original No: C90Z-5260A
Application: Fairlane, Comet
Year: 68-69

Original No: C80Z-5260C
Application: Falcon Station Wagon
Year: 68-70

Original No: C80Z-5260D

**F-290**

Original No: D0DZ-5A246A

Application: Maverick

Year: 1970

# Ford Products

**f-291**

Original No: D0DZ-5260A

Application: Maverick

Year: 1970

**F-293**

Original No: C70Z-5260F

Application: Comet, Fairlane, Falcon

Year: 1967

**F-294**

Original No: C70Z-5260B
Application: Comet, Montego, Fairlane
Year: 67-71

Original No: C80Z-5260A
Application: Torino

Application: Falcon
Year: 1970

**F-295**

Original No: C3DZ-5260B
Application: Comet, Montego, Torino
Year: 1969

Original No: C5GY-5A246B
Application: Falcon
Year: 66-70

Application: Ford
Year: 1965

Application: Ford, Ford Truck
Year: 68-75

Application: Mercury
Year: 65-66

Application: Mercury Grand Marquis
Year: 1993

# Ford Products

**F-296**

Original No: C5DZ-5260A
Application: Falcon
Year: 1965

Original No: C3DZ-5260A

Original No: C20A-5A238C

**F-297**

Original No: C9WY-5260B
Application: Cougar
Year: 68-73

Original No: C9WY-5260C

**F-302**

Original No: C7ZZ-5266A
Application: Ford
Year: 67-69

Application: Mustang
Year: 1970

**F-303**

Original No: D00Z-5260D
Application: Montego, Torino
Year: 70-71

Application: Comet, Fairlane, Falcon
Year: 1970

**f-304**

Original No: D00Z-5260E

Application: Comet, Fairlane, Falcon

Year: 1970

**F-306**

Original No: D0ZZ-5260A
Application: Comet, Montego, Torino
Year: 68-71

Original No: C80Z-5260C
Application: Cougar, Falcon
Year: 68-70

Original No: C8WY-5260C
Application: Mustang
Year: 69-73

Original No: C90Z-5260A

# Ford Products

**F-307**

Original No:  D0ZZ-5260B
Application:  Cougar, Mustang
Year:  68-73

Original No: D1ZZ-5260E

Image Coming Soon

**F-311**

Original No:  C70Z-5260C

Application:  Comet, Fairlane EXC.
Year:  67-70

Application: Station Wagon

**F-312**

Original No:  C7DZ-5260B
Application:  Fairlane
Year:  67-71

Application: Falcon
Year: 67-70

**F-313**

Original No:  D12A-5A238A
Application:  Ford, Mercury Station Wagon
Year:  75-76

Application: Montego, Torino Station Wagon
Year: 1976

Application: Torino Ranchero
Year: 1974

**F-314**

Original No:  D0DZ-5A246B

Application:  Comet, Maverick

Year:  70-74

**F-315**

Original No:  D1DZ-5260A
Application:  Comet, Maverick
Year:  71-76

Original No: D4DZ-5260A
Application: Granada, Monarch
Year: 75-77

Original No: D50Z-5260C

# Ford Products

**F-316**

Original No:  D3AZ-5260B
Application:  Ford, Mercury
Year:  73-78

**F-317**

Original No:  C0AZ-5260A
Application:  Fairlane, Ranchero
Year:  70-71

Original: D2AZ-5260A
Application: Mustang
Year: 1967

Original No: D3AZ5260A
Application: Ford Station Wagon
Year: 71-87

Original No: D50Z-5260H
Application: Pinto
Year: 71-73

Original No: D8DZ-5260B
Application: Torino Station Wagon
Year: 75-78

Application: Mercury Station Wagon
Year: 71-74

Application: Montego Station Wagon
Year: 70-74

Application: Ford Galaxy, Merc. Full Size
Year: 64-66

Application: Mercury Cougar
Year: 1970

**F-319**

Original No:  D2FZ-5260A
Application:  Bobcat, Pinto Station Wagon
Year:  75-80

Original No: D4FZ-5260C

Original No: D5FZ-5260G

**F-321**

Original No:  D4ZZ-5260B
Application:  Mustang II
Year:  74-78

Original No: D4ZZ-5260D
Application: Bobcat, Pinto
Year: 75-80

Original No: D4ZZ-5260E

# Ford Products

**F-322**

Original No:  D40Z-5260C
Application:  Cougar, Montego, Torino
Year:  74-77

Original No: D50Z-5260D
Application: LTD II

Application: Thunderbird
Year: 1977

**F-323**

Original No:  D5ZZ-5260B

Application:  Mustang

Year:  75-76

Image Coming Soon

**F-324**

Original No:  D5DZ-5A246A

Application:  Granada, Maverick

Year:  75-76

**F-325**

Original No:  D5FZ-5260B

Application:  Pinto

Year:  75-76

**F-326**

Original No:  D5FZ-5260C

Application:  Pinto

Year:  75-76

**F-327**

Original No:  D4TZ-5260B
Application:  Ford Truck F-150 Super Cab
Year:  73-75

Original No: D4TZ-5260E

Original No: D4TZ-5A246D

Original No: D50Z-5260F

# Ford Products

**F-328**

Original No: D4ZZ-5260A

Application: Mustang II

Year: 1974

**F-329**

Original No: D20Z-5260D
Application: Torino
Year: 70-76

Original No: D20Z-5260D, B&P
Application: Montego, Thunderbird
Year: 72-76

**F-330**

Original No: C9AZ-5260C

Application: Ford, Mercury Station Wagon

Year: 69-71

**F-331**

Original No: D5TZ-5260B
Application: Ford Truck E&F Series
Year: 75-86

Original No: D5TZ-5A246A, C, G

Original No: D5TZ-5260A, C, F, G

Original No: D5TZ-5260J

**F-332**

Original No: D50Z-5260G
Application: Cougar, Thunder-bird
Year: 75-78

Application: Montego, Torino, LTDII
Year: 75076

**F-333**

Original No: D5AZ-5260G

Application: Ford, Mercury

Year: 75-76

# Ford Products

**F-334**

Original No:  D5AZ-5260H
Application:  Ford, Mercury
Year:  75-78

Original No: D7VY-5260A
Application: Lincoln
Year: 77-79

**F-335**

Original No:  C2TZ-5260C
Application:  Ford Truck P-350, 400, 500
Year:  69-76

Application: Ford Truck F-500
Year: 69-77

**F-336**

Original No:  D5DZ-5260C
Application:  Granada, Monarch
Year:  75-77

Application: Comet, Maverick
Year: 74-76

Image Coming Soon

**F-337**

Original No:  D4ZZ-5A246A

Application:  Mustang, Pinto

Year: 1974

**F-338**

Original No:  D4TZ-5260F

Application:  Ford Truck F Series

Year:  73-75

**F-339**

Original No:  D5DZ-5260E&F
Application:  Comet, Maverick, Granada
Year:  75-80

Application: LIncoln Versailles
Year: 77-80

# Ford Products

**F-339X**

Original No: D8DZ-5260B
Application: Granada, Monarch
Year: 78-79

Application: Versailles

**F-340**

Original No: C1TT-5A231D
Application: Cougar
Year: 73-76

Application: Ford, Mercury
Year: 73-74

**F-341**

Original No: D5AZ-5260D

Application: Ford Mercury

Year: 69-78

**F-342**

Original No: D5AZ-5260E

Application: Ford, Mercury

Year: 69-78

**F-343**

Original No: D5OZ-5260D
Application: Cougar, LTD II, Montego
Year: 74-76

Original No: D4OZ-5260C
Application: Torino

Application: Thunderbird
Year: 1977

**F-344**

Original No: D7DZ-5260A
Application: Comet, Maverick
Year: 1977

Application: Granada, Monarch
Year: 77-80

Application: Versailles
Year: 78-80

# Ford Products

**F-345**

Original No: D7LY-5260A
Application: Ford, Mercury
Year: 73-78

Application: Lincoln
Year: 75-76

Application: Lincoln, Mark V
Year: 77-79

**F-346**

Original No: D5OZ-5260N
Application: Cougar, LTD II, Thnderbird
Year: 77-78

Application: Lincoln
Year: 1979

**F-347**

Original No: D6SZ-5260A&B
Application: Lincon Mark IV, V
Year: 74-78

Application: Thunderbird
Year: 74-76

**F-348**

Original No: D9BZ-5260B
Application: Capri, Mustang, Fairmont
Year: 79-82

Original No: E1BZ-5A246A
Application: Zephyr

Application: Granada
Year: 81-82

**F-349**

Original No: D9BZ-5260C
Application: Capri, Mustang, Fairmont
Year: 79-83

Original No: E1BZ-5260A&B
Application: Zephyr

**F-350**

Original No: D9BZ-5260C

Application: Cougar, LTD II, Thunderbird

Year: 1979

# Ford Products

**F-351**

Original No: D9AZ-5260A
Application: Ford, Mercury
Year: 79-89

Original No: EOLY-5260B
Application: Lincoln Mark III, IV, V, VI
Year: 80-89

Application: LTD
Year: 79-89

**F-352**

Original No: D9AZ-5260B

Application: Ford, Mercury

Year: 79-83

**F-353**

Original No: D9OZ-5260A

Application: Cougar, LTD II, Thunderbird

Year: 1979

**F-354**

Original No: EOBZ-5A246A

Application: Mustang

Year: 80-81

**F-355**

Application: Bronco Muffler Clamp
Year: 78-96

Application: F-350
Year: 87-97

**F-356**

Original No: D7TZ-5260H
Application: Ford Truck E, F
Year: 75-86

Application: Bronco
Year: 75-80

# Ford Products

**F-357**

Original No: D5OZ-5260R
Application: Cougar, LTD II, Thunderbird

Year: 77-78

Application: Lincoln Mark V
Year: 1979

Image Coming Soon

**F-358**

Original No: C9OZ-5260D

Application: Cougar, LTD II, Thnderbird

Year: 1979

**F-359**

Original No: D77Z-5277B

Application: Courier

Year: 78-82

**F-360**

Original No: EOSZ-5260C
Application: Bobcat, Pinto Station Wagon
Year: 75-79

Original No: EOLY-5260A
Application: Ford, Mercury, Lincoln
Year: 80-88

Original No: EOLY-5A246A
Application: Lincoln Mark VI, VII
Year: 80-92

**F-362**

Original No: E0SZ-5260A
Application: Cougar, Thunderbird
Year: 81-87

Original No: E7SZ-5260A
Application: Lincoln Cont.
Year: 82-87

Original No: E2SZ-SC263A
Application: Lincoln Mercury Series
Year: 86-92

Application: Granada
YEar: 1982

**F-363**

Original No: D75SZ-5260A
Application: Ford, Mercury
Year: 79-90

Application: Lincoln
Year: 80-90

# Ford Products

**F-365**

Original No: E0SZ-5260B
Application: Mark Series
Year: 80-92

Application: Lincoln Town Car
Year: 81-88

Application: Cougar, Thunderbird
Year: 81-88

Application: Lincoln Cont.

Application: Ford Full Size, Merc. Full
Year: 80-89

**F-366**

Original No: D77Z-5260D

Application: Ford Courier

Year: 77-82

**F-367**

Original No: E0TZ-5260B

Application: Ford Truck

Year: 80-86

**F-368**

Original No: E0TZ-5260B

Application: Ford Truck

Year: 80-86

**F-369**

Original No: D90Z-5260B

Application: LTD II, Ranchero

Year: 1979

Image Coming Soon

**F-370**

Original No: 35161
Application: Ford
Year: 67-72

Application: Mercury
Year: 69-72

Application: Station Wagon
Year: 67-78

# Ford Products

**F-371**

Original No:  E3SZ-5277B
Application:  Thunderbird, Cougar, Capri
Year:  83-93

Original No: E4SZ-5277A
Application: Mustang LTD
Year: 83-93

Original No:  E3DZ-5277A

**F-372**

Original No:  E3ZZ-5277A
Application:  Mustang Capri
Year:  83-93

Application: Mustang II
Year: 86-94

Image Coming Soon

**F-373**

Original No:  E0AZ-5A277B
Application:  Ford, Mercury
Year:  80-82

Original No:  E2AZ-5A277A

**F-374**

Original No:  E60Z-5A246A

Application:  Thunderbird, Cougar

Year:  86-87

**F-376**

Original No:  E6LY-5C263A
Application:  Thunderbird, Cougar
Year:  1988

Application: Lincoln Mark Series
Year: 86-92

**F-377**

Original No:  E8TZ-5230D

Application:  Bronco, F-350 Truck

Year:  87-94

# Ford Products

Image Coming Soon

**F-378**

Original No: ESTZ-5230A

Application: Pickup F-250, F-350

Year: 85-97

Image Coming Soon

**F-379**

Original No: E69Z-5A226A

Application: Areostar

Year: 86-89

Image Coming Soon

**F-380**

Original No: E7TZ-5230H
Application: Ford Truck F-250
Year: 87-96

Application: F-350 Diesel

Application: Ford Truck F-Super Diesel
Year: 88=90

Image Coming Soon

**F-381**

Image Coming Soon

Original No: E5TZ-5230A
Application: Ford Truck F-250, F-350
Year: 85-86

Application: W/6.9 L Diesel

Image Coming Soon

**F-382**

Original No: E7TZ-5230J
Application: Ford Truck F-250
Year: 87-97

Application: F-350 Diesel

Application: Ford Truck F-Super Diesel
Year: 88-93

Application: F-450
Year: 94-97

**F-383**

Original No: E8DZ-5230H

Application: Taurus, Lincoln Cont., Sable

Year: 88-95

# Ford Products

Image Coming Soon

**F-384**

Original No: F02Z-5277B

Application: Ford Probe

Year: 90-92

Image Coming Soon

**F-385**

Original No: E8ZZ-5A294A

Application: Ford Mustang GT

Year: 88-90

**F-386**

Original No: F02Z-5277A

Application: Ford Probe

Year: 90-92

**F-391**

Original No: E6TZ-5A246B

Application: Pick up F-150, F-250, F-350

Year: 86-96

**F-392**

Original No: E8TZ-5230F
Application: Ford Truck F-350, F-450
Year: 87-97

Application: Chassis Cab, Crew Cab

Application: Super Duty

Image Coming Soon

**F-393**

Application: Taurus, Sable

Year: 91-93

# Ford Products

**F-394**

Application: Ford Truck F Series

Year: 84-86

Image Coming Soon

**F-395**

Original No: E8DZ-5230Z
Application: Ford Taurus

Application: Mercury Sable
Year: 88-95

Image Coming Soon

**F-396**

Original No: E8DZ-5230D
Application: Ford Taurus

Application: Mercury Sable

Application: Station Wagon
Year: 89-95

Image Coming Soon

**F-397**

Original No: E3LY-5230B
Application: Lincoln Mark

Application: VI, VII, VIII
Year: 93-97

Image Coming Soon

**F-398**

Application: Ford Truck F-150

Application: 250
Year: 88-89

**O-536**

Original No: 579469 RU
Application: Ford & Mercury

Application: Station Wagon
Year: 73-89

Application: Ford Torino
Year: 74-76

Application: Ranchero
Year: 74-78

# Ford Products

**U-1006**

Original No:  Universal
Application:  Montego, Torino

Application: Station Wagon
Year: 1973

Application: Mustang
Year: 67-79

**U-1053**

Original No:  Universal
Application:  Comet, Montego, Torino
Year:  68-71

Application: Cougar
Year: 68-73

Application: Falcon
Year: 67-70

Application: Lincoln MArk IV, V
Year: 74-78

Application: Mustang
Year: 68-73

Application: Thnderbird
Year: 74-76

**U-1054**

Original No:  Universal

Application:  Bobcat, Pinto

Year:  75-80

**U-1058**

Application:  Fairlane, Torino, Comet, Montego
Year:  69-71

Application: Falcon
Year: 70-72

# Ford Products

**U-1065**

Application: Mercury, Monarch, Meteor, Cougar, Comet, Ford Mustang, Maverick, Granada, Falcon, Fairlane

Year: 62-69

**U-1070**

Original No: Universal

Application: Ford Truck

Year: 67-72

**U-1071**

Original No: Universal
Application: Mustang
Year: 84-93

Application: Thunderbird
Year: 83-88

Application: Mercury, Capri, Cougar
Year: 83-86

**C-196**

Application: Ford Truck E-F Series

Year: 75-79

**G-80**

Original No: E-7GZ-5F262B
Application: Ford Festiva, Tracer
Year: 88-93

Application: Aspire
Year: 94-97

# Ford Products

**G-83**

Original No:  D8RZ-5281A
Application:  Capri
Year:  1986

Original No: E3TZ-5A262A
Application: Cougar
Year: 1982

Application: Escort, LN7, Lynx
Year: 81-82

Application: Ford Truck,
Bronco II
Year: 84-85

Application: Ford Ranger
Year: 83-87

Application: Merkur
Year: 88-90

Application: Mustang
Year: 86-88

Application: Mercury Tracer
Year: 1990

**G-89**

Application: Ford Courier

Year:  77-80

**G-92**

Application: Mercury Tracer
Year:  1990

Application: Mercury Capri
Year: 91-92

Application: Ford Taurus

Application: Mercury Sable
Year: 88-97

**G-99**

Original No: D2RY-5281A
Application: Mercury Capri
Year: 72-78

Original No: D5RY-5281A
Application: Mercury Tracer
Year: 1990

**G-102**

Application: Ford Truck Courier

Year:  74-81

# Ford Products

**G-104**

Original No: D47Z-5277C

Application: Ford Courier

Year: 77-82

**G-105**

Application: Lincoln Town Car, Mercury Mystique, Grand Marquise, Ford Crown Victoria
Year: 95-96

Application: Contour
Year: 95-97

**G-106**

Application: Bronco, Ranger, F-Series
Year: 82-97

Application: Thunderbird
Year: 89-97

Application: Mustang
Year: 83-95

Application: Lincoln
Year: 81-89

Application: Taurus, Taurus Sho, Sable
Year: 88-95

Application: Lincoln Continental
Year: 88-94

Application: Mercury Mystique, Contour
Year: 95-97

Application: Cougar
Year: 89-97

**G-107**

Application: Fiesta
Year: 78-80

Application: Thunderbird, Capri, Cougar, LTD, Marquis
Year: 83-86

Original No: E1FZ-SF262A
Application: Capri, Cougar, Mustang, Topaz
Year: 83-93

Original No: E3DZ-5F262A
Application: Escort, Lynx
Year: 82-85

Application: Fairmont, Zephyr
Year: 1983

Application: Mustang, Tempo
Year: 83-94

Application: Thunderbird
Year: 80-86

Application: Taurus
Year: 92-93

# Ford Products

**G-109**

Original No:  E3FZ-5F262A
Application: Mustang
Year:  87-93

Original No: E4F262A
Application: Cougar, LTD, Marquis, Capri

Original No: E5FZ-5F262A
Application: Mustang
Year: 83-86

Application: Escort, Lynx
Year: 82-92

Application: Fairmont, Zephyr
Year: 1983

Application: Tempo, Topaz
Year: 80-94

Application: Thunderbird
Year: 80-88

Application: Lincoln Cont.
Year: 88-94

Application: Sable, Taurus
Year: 86-95

Application: Merkur
Year: 85-89

**G-110**

Original No: FOOY-5F262A
Application: Lincoln Cont
Year:  90-95

Application: Sable, Taurus
Year: 91-95

**G-114**

Application: Mercury Tracer
Year: 88-96

Applicaiton: Capri
Year: 91-94

Application: Festiva
Year: 86-93

Application: Probe
Year: 89-92

Appllication: Escort
Year: 92-96

**G-117**

Original No: E3TZ-5A262B
Application: Cougar
Year: 89-95

Original No: E3ZZ-5F262A
Application: Ford Truck F-150, 250, 350
Year: 87-95

Original No: E6ZZ-5A246B&C
Application: Ford Truck, Explorer, Ranger

Original No: E6ZZ-5260A
Application: Ford Truck, F Series, Bronco

Original No: E6ZZ-5C263A
Application: Ranger
Year: 83-95

Application: Lincoln Cont
Year: 88-94

Application: Mustang, Taurus
Year: 86-95

Application: Sable, Thunderbird
Year: 89-95

# Ford Products

**G-121**

Application: Lincoln Town Car
Year: 92-97

Application: Ford Probe
Year: 94-97

Application: LTD
Year: 1989

Application: Crown Victoria
Year: 84-92

**G-136**

Original No: E69Z-5260A

Application: Areostar

Year: 86-88

**G-142**

Original No: E7GZ-5F262A
Application: Ford Crown, Vic, Grand Marquis
Year: 90-94

Original No: E9ZZ-5F262A
Application: Lincoln
Year: 90-94

Original No: E8VZ-5F262A
Application: Ford Escort

Application: Mercury Tracer
Year: 91-94

Application: Ford Festiva
Year: 88-93

Application: Ford Probe
Year: 89-94

Application: Ranger, Windstar
Year: 85-97

**G-145**

Application: Lincoln Mark

Year: 86-89

**G-146**

Original No: E8OY-5F262B
Application: Lincoln Cont.
Year: 88-94

Application: Sable, Taurus
Year: 88-95

# Ford Products

**G-147**

Original No: E9SZ-5F262A
Application: Ford, Thunderbird

Application: Cougar
Year: 89-97

Application: Lincoln cont.
Year: 1992

Application: Mustang
Year: 94-97

Application: Taurus
Year: 92-94

**G-148**

Application: Taurus
Year: 92-95

Application: Sable
Year: 86-95

Application: Grand Marquis

Application: Lincoln Town Car
Year: 90-97

Application: Ford Probe
Year: 83-97

Application: Lincoln Cont.
Year: 90-94

Application: LTD, Crown Victoria
Year: 90-97

**G-155**

Application: Ford Aspire

Year: 94-97

**G-189**

Application: Mercury Capri

Year: 71-78

# GM Products

**B-626**

Original No: 1199165
Application: Buick
Year: 61-64

Original No: 1356699
Application: Buick Special, Skylark
Year: 64-72

Application: Century, Regal, Chevelle
Year: 74-77

Application: Cutlass, Tempest, Lemans
Year: 64-77

Application: GMC Truck, Sprint
Year: 1974

Application: Grand Prix
Year: 69-77

Application: Nova, Ventura II
Year: 71-72

**B-632**

Original No: 1361931
Application: Cutlass, Tempest, Lemans, GTO
Year: 64-67

Original No: 1382598
Application: Buick
Year: 61-64

Original No: 390180
Application: Century, Regal
Year: 74-77

Original No: 1244015
Application: Skylark, Buick Special
Year: 64-72

Original No: 9785678
Application: Chevell, Monte Carlo
Year: 74-76

Application: Chevelle
Year: 1968

Applicatoin: Grand Prix
Year: 69-77

**B-634**

Original No: 1366734
Application: Buik, Exc. Riviera

Original No: 1385765
Appliation: Sport Wagon
Year: 65-70

**B635**

Original No: 1374123

Application: Riviera

Year: 66-70

# GM Products

**B636**

Original No: 1374123

Application: Riviera

Year: 66-70

**B637**

Original No: 1374103

Application: Riviera

Year: 66-70

**B-638**

Original No: 1374102

Application: Riviera

Year: 66-70

**B-639**

Original No: 1374117

Application: Riviera

Year: 66-70

**B-640**

Original No: 1374116

Application: Riviera

Year: 66-70

**B-641**

Original No: 1245533
Application: Buick, Chev., Oldsmobile
Year: 74-76

Application: Pontiac
Year: 75-76

# GM Products

**B-642**

Original No: 1236942
Application: Buick, Chev., Olds
Year: 71-76

Original No: 1247722
Application: Pontiac Station Wagon
Year: 71-76

**B-643**

Original No: 1253624
Application: Monta
Year: 78-80

Original No: 1255219
Application: Skyhawk, Starfire, Sunbird
Year: 76-80

Application: Firebird
Year: 80-81

**S-105**

Original No: 3632485

Application: Cadillac

Year: 64-70

**S-110**

Original No: 3633297
Application: Cadillac
Year: 68-70

Original No: 3633160

**S-114**

Original No: 3633477

Application: Cadillac

Year: 1970

Image Coming Soon

**S-115**

Original No: 3634007
Application: Eldorado, Seville & Limo
Year: 71-78

Original No: 3633598
Application: Fleetwood Brohm
Year: 1976

Original No: 1607511

# GM Products

**S-116**

Original No: 1262814
Application: Eldorado, Riviera

Application: Toronado
Year: 79-85

Application: Seville
Year: 80-85

**S-117**

Original No: 1619492
Application: Fleetwood Brohm
Year: 84-85

Original No: 1261283
Application: Sedan Deville, Coupe

Application: Deville
Year: 82-83

Application: Eldorado

Application: Buick Riviera
Year: 79-85

Application: Seville
Year: 81-85

Application: Olds Toronado
Year: 82-85

Image Coming Soon

**S-118**

Original No: 1259812
Application: Buick Riviera

Application: Cad. Eldorado
Year: 79-85

Application: Cadillac Seville
Year: 80-85

Application: Toronado
Year: 79-85

Image Coming Soon

**S-119**

Original No: 1259808
Application: Cadillac
Year: 79-83

# GM Products

**C-109**

Original No: 3743000
Application: Chevy

Application: Olds
Year: 51-57

**C-124**

Original No: 3746524
Application: Chevy Truck 10/80
Year: 34-70

Application: GMC 1/2-1 1/2 Ton
Year: 60-66

Application: Chevy 5000-10000

Application: Series 6100-6800
Year: 58-59

Application: Chevy Convair
Year: 61-65

Image Coming Soon

**C-137**

Original No: 3785623
Application: Chevy II
Year: 62-67

Application: Chevrolet &GMC
Truck
Year: 64-70

**C-142**

Original No: 3791093
Application: Chevy II
Year: 62-67

Application: Chevrolet & GMC
Truck
Year: 64-70

# GM Products

**C-146**

Original No: 1364300
Application:Buick, Buick Special

Application: Chevelle
Year: 64-72

Original No: 9790492
Application: Lesabre, Wildcat
Year: 68-72

Original No: 1382594
Application: Monte Carlo
Year: 70-72

Original No: 1236174
Application: GMC Truck
Year: 71-72

**C-147**

Original No: 1364301
Application: Buick Sperial, Chevelle

Original No: 9790493
Application: Olds F-85, Tempest
Year: 64-72

Original No: 9780493
Application: GMC Truck
Year: 71-72
Original No: 1382595
Application: Monte Carlo
Year: 70-72

Original No: 1236175

**C-148**

Original No: 1361726
Application: Chevelle, olds F-85
Year: 964

Original No: 3853659
Application: GMC Truck
Year: 71-72

Application: Monte Carlo
Year: 1970

Application: Tempest
Year: 64-65

**C-149**

Original No: 1361727
Application: Chevelle, Tempest

Application: Lemans
Year: 64-72

Original No: 3853660
Application: Station Wagon
Year: 64-72

Application: Pontiac Station Wagon
YEar: 63-70

# GM Products

**C-159**

Original No: 3892789
Application: Chevy, Camaro, Chevy II

Application: Nova
Year: 67-68

**C-160**

Original No: 3842793
Application: Chevrolet Truck
Year: 62-90

Original No: 3842795
Application: GMC Truck
Year: 73-90

**C-161**

Original No: 3947542
Application: Chevrolet
Year: 69-70

**C-163**

Original No: 3947542
Application: Chevrolet
Year: 69-70

**C-164**

Original No: 3953224
Application: Camaro
Year: 1969

Original No: 3967826
Application: Chevyll, Pontiac
Year: 69-72

Original No: 3967825
Application: Ventura II
Year: 71-72

**C-165**

Original No: 3953228
Application: Camaro
Year: 1969

Original No: 3964858
Application: Chevy II
Year: 69-72

Original No: 3967825
Application: Ventura II
Year: 71-72

# GM Products

**C-166**

Original No: 3930087
Application: Firebird
Year: 67-69

Original No: 3930033
Application: Chevy II, Nova
Year: 68-72

Original No: 3920204
Application: Pontiac Ventura
Year: 1972

Application: Camaro
Year: 67-69

**C-171**

Original No: 3925122
Application: Chevelle
Year: 68-72

Original No: 3980768
Applicaiton: Monte Carlo

Application: Olds Cutlass
Year: 70-72

**C-172**

Original No: 3925121
Application: Chevelle
Year: 68-72

Original No: 3980767
Application: Monte Carlo
Year: 71-72

Original No: 406600
Application: Olds F-85
Year: 1972

Application: Cutlass
Year: 70-72

**C-174**

Original No: 3958465
Application: Camaro
Year: 69-72

Original No: 3965633
Application: Chevy II, Nova
Year: 69-72

Application: Pontiac Ventura II
Year: 1972

**C-175**

Original No: 3954681
Application: Chevrolet
Year: 69-70

Original No: 3947554

Original No: 3954682

Original No: 3972515

**C-178**

Original No: 3964036
Application: Chevrolet Station Wagon
Year: 69-70

Original No: 3920204

# GM Products

**C-179**

Application: Camaro
Year: 80-81

Original No: 3983556
Application: Chevrolet Truck
Year: 63-80

Original No: 3996543
Application: GMC Truck
Year: 77-85

Original No: 3881174, 3983547, 3981155

**C-180**

Original No: 1237359
Application: Buick, olds, Century, Regal

Original No: 1242421
Application: Riviera, Toronado
Year: 71-74

Original No: 3961906
Application: Cutlass
Year: 73-74

Original No: 3947543
Application: Chevelle, Monte Carlo
Year: 1973

Original No: 360024
Application: Chevrolet
Year: 69-74

Application: Chevy, GMC Truck

Application: C,G, K Series
Year: 71-90

Application: Pontiac
Year: 71-72

Application: Camaro Z28
Year: 80-81

**C-181**

Original No: 1238385
Application: Buick, Olds

Application: Toronado
Year: 71-74

Application: Monte Carlo, Chevelle

Application: Sprint
Year: 1973

Application: Blazer, Jimmy
Year: 87-89

Application: Pontiac
Year: 71-72

# GM Products

**C-182**

Original No: 1237363
Application: Buik, Pontiac

Application: Chevrolet
Year: 71-73

Original No: 1241563
Application: olds
Year: 71-73

**C-183**

Original No: 1237366
Application: Buick, Chevrolet, Olds

Application: Pontiac
Year: 71-76

Original No: 351206
Application: Riviera
Year: 1974

Original No: 1243880
Application: Chevelle, GMC Truck

Application: El Camino, Sprint
Year: 70-72

**C-184**

Original No: 1237362
Application: Buick, Pontiac, Chevy, Oldsmobile
Year: 71-73

Original No:
1241562

**C-185**

Original No: 1235537
Application: Buick, Pontiac, Chevy, Olds, Station Wagon
Year: 71-76

Image Coming Soon

**C-186**

Original No: 1236950
Application: Buick, Pontiac, Chevy, Oldsmobile
Year: 71-76

Original No: 360023
Application: Station Wagon
Year: 71-76

Application: Camaro Z28
Year: 81-81

**C-187**

Original No: 3983052
Application: Buick, Apollo, Nova
Year: 73-74

Application: Omega, Ventura
Year: 73-74

Application: Camaro, Firebird
Year: 70-74

# GM Products

**C-188**

Original No: 3983053
Application: Buick, Apollo, Skylark, Chevy
Year: 73-79

Original No: 340361
Application: Nova, Olds, Omega, Ventura II
Year: 73-79

Application: Camaro
Year: 70-81

Application: Firebird
Year: 70-81

Application: Phoenix
Year: 1979

**C-189**

Original No: 3997259
Application: Vega
Year: 71-77

**C-190**

Original No: 1240616
Application: Buick Century, Regal
Year: 1973

Original No: 1241093
Application: Chevelle, Monte Carlo, Cutlass
Year: 1973

Application: Cadillac
Year: 62-65

**C-191**

Original No: 1247746
Application: Buick, olds, Pontiac, Riviera, Chevrolet
Year: 75-76

Application: Monte Carlo, cutlass, GMC Truck, Sprint, Grand Prix, Lemans
Year: 75-77

Application: Toronado
Year: 75-78

Application: Skylark, Apollo
Year: 76-79

# GM Products

**C-192**

Original No: 1247747
Application: Buick, olds, Pontiac, Riviera, Century, Regal, Chevelle
Year: 75-93

Application: Monte Carlo, Cutlass, Lemans
Year: 75-77

Application: Chevrolet
Year: 75-92

Application: Toronado
Year: 76-78

Application: Skylark, Apollo
Year: 76-79

Application: Cadillac
Year: 77-89

Application: Caprice Police Car
Yar: 85-91

**C-193**

Original No: 1247748
Application: olds, Custom Cruiser
Year:91-92

Original No: 1252085
Application: Buick, Chevrolet, Olds, Pontiac
Year: 75-93

Original No: 10156983
Application: Cadillac
Year: 77-93

Application: Century, Regal, Chevelle, Monte Carlo, Sprint, El Camino, Grand Prix, Lemans
Year: 75-77

Application: Riviera
Yar: 75-78

Application: Toronado
Year: 75-88

Application: Caprice Police Car
Year: 85-92

Application: Cutlass
Year: 75-77

**C-194**

Original No: 356521
Application: Apollo, Skylark
Year: 73-85

Original No: 359946
Application: Camero, Firebird
Year: 75-81

Application: Nova, Omega, Ventura II
Year: 73-79

Application: Chevrolet, GMC Truck
Year: 81-93

Application: Cadillac, Eldorado, Seville
Year: 79-85

# GM Products

Image Coming Soon

**C-195**

Original No: 374218
Application: Apollo, Skylark
Year: 79-76

Application: Ventura II, Nova

Appliation: Omega
Year: 73-77

Application: Camaro, Firebird
Year: 75-81

**C-196**

Original No: 341271
Application: Buick, Chevy, Oldsmobile, Pontiac
Year: 71-76

Original No: 350092
Application: Station Wagon
Year: 71-76

Original No: 353979
Application: Cadillac
Year: 71-78

Original No: 462954
Appication: Camaro, Chevy Ii
Year: 1968

Original No: 346875
Application: Chevy, GMC Truck, C, G, K, P
Year: 71-90

Original No: 352732
Application: Series, Blazer, Jimmy
Year: 71-90

Original No: 355464
Application: Monza, Skyhawk, Starfire
Year: 75-80

Original No: 464750
Application: Riviera
Year: 74-76

Original No: 1236948
Application: Seville
Year: 75-79

Original No: 3633670
Application: Sunbird
Year: 76-80

Original NO: 3633673
Application: Toronado
Year: 71-74

Application: Skylark, Apollo
Year: 73-75

Application: Corvette
Year: 85-94

**C-197**

Original No: 374216
Application: Apollo, Skylark, Ventura II
Year: 73-77

Application: Camaro
Year: 75-81

Application: Firebird
Year: 75-77

Application: Nova, OMega, Chevy II
Year: 73-77

Application: PHoenix
Year: 1977

# GM Products

**C-198**

Original No: 356391
Application: Monza, Skylark, Starfire, Sunbird
Year: 75-80

Chevy Monza
Year: 76-79

**C-199**

Original No: 1253639
Application: Buick, Olds, Chevy, Pontiac
Year: 77-93

Application: Cadillac
Year: 77-92

Application: Caprice Police Car
Year: 85-92

Application: Impala
Year: 85-92

**C-200**

Original No: 1251797
Application: Buick, Olds
Year: 77-85

Original No: 25501985
Application: Chevrolet, Pontiac
Year: 77-90

Application: Riviera
Year: 77-78

Application: Cadillac
Year: 77-92

Application: Caprice Police Car
Year: 85-88

# GM Products

**C-201**

Original No: 326736
Application: Chevy, GMC Truck G Series
Year: 71-91

Original No: 352733
Application: Chevy, GMC Truck P Series
Year: 82-87

**C-202**

Original No: 1258164
Application: Century, Regal, monte Carlo

Original No: 1257327
Application: Cutlass, Lemans, Grand Prix
Year: 78-85

Application: GMC Truck Caballero
Year: 78-79

Application: Malibu, Chevelle
Year: 78-84

**C-203**

Original No: 1252177
Application: Buick, Chevy, Olds, Pontiac, Station Wagon
Year: 77-79

**C-204**

Original No: 1257749
Application: Century, Regal, Cutlass

Original No: 1257237
Application: Lemans, Monte Carlo, Malibu
Year: 78-81

Original No: 1259481
Application: Grand Prix, GMC Truck, Caballero
Year: 78-79

Image Coming Soon

**C-205**

Original No: 1252750
Application: Apollo, Skylark, Omega

Original No: 1260788
Application: Ventura II, Phoenix
Year: 76-79

Application: Camaro
Year: 78-81

Application: Firebird
Year: 77-81

Application: Nova
Year: 78-79

# GM Products

**C-206**

Original No: 1249913
Application: Apollo, Skylar, Omega, Ventura II, Phoenix
Year: 76-79

Application: Camaro, Nova
Year: 78-81

Applicaiton: Firebird
Year: 77-81

**C-207**

Original No: 1244015
Application: Buick Century
Year: 74-76

Application: Chevelle, Malibu, Monte Carlo, Grand Prix, Tempest, Lemans
Year: 1974

**C-208**

Original No: 1261614
Application: Chevrolet Corvette
Year: 86-94

Original No: 15598205
Application: Lumina Van, Pontiac Sport Van
YEar: 90-96

Application: Chevy, GMC Truck Series, 6000, Celebrity, Century, Ciera
Year: 82-92

Application: Ciera
Yyear: 82-92

Application: A6000, 6000, Celebrity, Ciera, Century, Citation, Skylark
Year: 80-92

Application: OMega, PHoenix
Year: 80-91

**C-209**

Original No: 25501936
Application: Celebrity
Year: 82-88

Application: Citation
Year: 80-90

Application: OMega, PHoenix, Apollo, Skylark, Regal, Century
Year: 80-92

Application: buick Cenury, olds, Cutlass
Year: 86-92

Application: El Camino, Chevelle
Year: 82-88

# GM Products

**C-210**

Original No: 25504485
Application: Century, Cutlass, F85, Grand Prix, Regal
Year: 80-88

Application: Lemans, Malibu, Monte Carlo
YearL 80-84

Application: Bonneville
Year: 82-87

Application: Chevy, GMC Truck, Caballero, El Camino, olds, Monte Carlo
Year: 80-84

**C-211**

Original No: 25501937
Application: Citation, Celebrity, Skylark, Apollo
Year: 80-88

Aplication: Omega, PHoenix
Year: 80-87

Application: Century, Ragal, Ciera, Cutlass, Pontiac 6000
Year: 82-92

Image Coming Soon

**C-212**

Original No: 25501624
Application: OMega, Poenix
Year: 80-84

Application: Citation, Skylark, Century Regal, Celebrity
Yar: 80-85

Application: Ciera, CUtlass
Year: 82-85

Application: Chevy, Buick, olds
Year: 92-93

**C-213**

Original No: 25502445
Application: Estate Wagon, Olds Wagon, pontiac Wagon
Year:80-93

**C-214**

Original No: 559864
Application: Impala, Caprice, Le Sabra, 350 Ci & Diesel
Year: 80-81

# GM Products

**C-215**

Original No: 94023911
Application: Chevy LUV Truck
Year: 75-80

**C-216**

Original No: 25504324
Application: Buick, Olds, Chevrolet
Year: 80-85

Application: Cadillac
Year: 80-85

Application: Pontiac
Year: 81-85

Application: Oldsmobile Diesel
Year: 1988

Image Coming Soon

**C-217**

Original No: 25509234
Application: Skylark
Year: 80-92

Application: Century, Regal, Citation, Celebrity, OMega, Ciera 6000
Year: 82-92

Application: Chevy, BMC Truck S Series
Year: 82-91

Application: Chevy, BMC Truck S10
Year: 88-91

Application: Chevy, GMC Blazer, Jimmy
Year: 83-91

Application: Olds Bravada
Year: 91-92

**C-218**

Original No: 14014765
Application: Chevy, GMC Truck Single & Duel
Year: 80-87

Original No: 14014761

Original No: 14014769

Original No: 14034516

**C-219**

Original No: 10020459
Application: F Body
Year: 82-97

# GM Products

**C-220**

Original No: 25511784
Application: G Body
Year: 82-88

**C-221**

Original No: 25511783
Application: G Body
Year: 82-88

**C-223**

Original No: 25509597
Application: Cavalier, Regal, Sky-hawk, Skylark
Year: 85-92

Application: Calais, Grand AM, Somerset
Year: 85-91

Application: Sunbird 2000, J2000
Year: 87-90

Image Coming Soon

**C-224**

Original No: 25512989
Application: J Car (Rubber Only)
Year: 82-84

Image Coming Soon

**C-225**

Original No: 35347
Application: Chevelle, Monte Carlo
Year: 73-74

# GM Products

Image Coming Soon

**C-226**

Original No: 25525160
Application: Pontiac, Grand AM, Chevy, Cavalier, Buick, Skyhawk, Firenza, Pontiac J2000
Year: 84-89

Application: Cadillac Cimarron, Calais
Year: 85-88

Applicaton: Achieve, Grand Prix, Regal, Skylark
Year: 92-94

Application: Chevy, Beretta, Corsica
Year: 93-95

Image Coming Soon

**C-227**

Original No: 25521693
Application: Cavalier, Sky-hawk, Firenza, Calais, J200, Grand AM, Cadillac, Cimarron
Year: **85-88**

Application: Beretta, Corsica
Year: 87-93

Application: Achieva, Regal, Skylark
Year: 1992

Application: Grand AM
Year: 90-94

Image Coming Soon

**C-228**

Original No: 25521686
Application: Chevy, Somerset, Skyhawk

Original No: 25513349
Application: Firenza, Calais, Grand AM, Cavalier
Year: 83-94

Application: Pontiac J2000
Year: 82-94

Application: Cadillac Cimarro
Year: 83-84

Application: Skylark, Regal, Somerset
Year: 85-91

Application: Sunbird, Grand AM
Year: 87-94

# GM Products

**C-229**

Original No: 25514991
Application: Chevrolet, Celebrity
Year: 84-91

Original No: 25526239
Application: Olds., Buick, Cadillac, Cutlass, Ciera, Century
Year: 85-96

Application: Pontiac A6000
Year: 84-98

Application: Lumina van
Year: 90-96

Application: Cadillac Eldorado
Year: 86-92

Application: Cadillac Seville
Year: 86-93

Application: Buick La Sabre
Year: 81-97

**C-230**

Original No: 14**085042**
Application: Chevette, Pontiac T1000
Year: 82-87

**C-231**
Original No: 14085042
Application: All “J” Model, Cavalier
Year: 84-86

Application: Skyhawk, Firenza
Year: 82-86

Application: Cadillac Cimarron
Year: 82-87

Application: Monte Carlo
Year: 84-88

Application :Pontiac
Year: 85-86

**C-232**

Original No: 10041737
Application: Cadillac Eldorado, Seville
Year: 1992

Application: Camaro, Firebir
Year: 84-92

Application: Olds., Toronado
Year: 86-92

Application: Riviera
Year: 1992

**C-233**

Original No:14093201
Application: Celebrity
Year: 86-87

# GM Products

**C-234**
Original No: 25521696
Application: Cadillac Cimarron
Year: 86-88

Application: Cavalier, Regal, Skyhawk, Skylark
Year: 85-93

Application: Calais, Grand AM, Somerset
Year: 85-92

Application: Sunbird, 2000, J2000
Year: 87-98

Application: sunfire
Year: 1995

Image Coming Soon

**C-235**

Original No: 15550755
Application: Chevy Pickup G1,2,3
Year: 87-91

Application: Suburban
Year: 87-89

Application: Blazer, Jimmy
Year: 73-91

Application: Chevy, GMC Truck
Year: 88-93

**C-236**

Original No: 14034519
Application: Chevy, Pickup V10
Year: 87-90

Application: Blazer, Jimmy
Year: 71-87

**C-237**

Original No: 15596401
Application: S-10 Pickup
Year: 82-91

Application: Astro, Safari Van
Year: 85-91

**C-238**

Original No: 14049660
Application: Chevy, Pickup
S10, RU, R20
Year: 83-91

Application: Olds Bravado
Year: 1991

# GM Products

**C-239**

Original No: 15550765

Application: Chevy Full Size Van

Year: 1987

Image Coming Soon

**C-240**

Original No: 25521686
Application: Chevy, Somerset, Skylar, Firenza, Calais, Grand AM
Year: 83-94

Application: Cavalier
Year: 83-94

Application: Pontiac J2000
Year: 82-84

Application: Cadillac Cimarron
Year: 83-87

Application: Skylark, Regal, Somerset
Year: 85-91

Application: Sunbird, Grand AM
Year: 87-94

Image Coming Soon

**C-241**

Original No: 2037987
Application: Chevy
Year: 87-88

**C-242**

Original No: 10053915
Application: Beretta, Corsica
Year: 87-92

# GM Products

**C-243**

Original No: 10020922
Application: Camaro, Firebird
Year: 84-96

Image Coming Soon

**C-244**

Original No: 10060620
Application: Cutlass, Grand Prix, Regal
Year: 88-96

Application: Lumina
Year: 90-94

**C-245**

Original No: 10060622
Application: Buick, Regal
Year: 88-93

Application: Lumina, Grand Prix
Year: 90-94

Application: Cutlass
Year: 89-96

**C-246**

Original No: 21010357
Application: Saturn
Year: 91-96

Image Coming Soon

**C-247**

Original No: 15598205
Application: Chevy Blazer, Jimmy
Year: 85-91

Application: LLV
Year: 87-95

Image Coming Soon

**C-248**

Original No: 10026085
Application: Buick Roadmaster
Year: 92-93

Application: Camaro, Firebird
Year: 83-92

Application: Olds Wagon, Buick Wagon
Year: 91-92

Application: Caprice
Year: 91-93

Application: Cadillac Fleetwood
Year: 1993

# GM Products

Image Coming Soon

**C-249**

Original No: 15641364
Application: Chevy, GMC, Blazer, Jimmy, Yukon
Year: 92-94

Application: Chevy, GMC, S10, 15, Sonoma
Year: 92-95

Application: Chevy, GMC Suburban
Year: 91-92

Image Coming Soon

**C-250**

Original No: 155648294
Application: Chevy S10, Blazer 4x4
Year: 1992

Image Coming Soon

**C-251**

Original No: 15598205
Application: Chevy, GMC Trucks
Year: 85-93

Original No: 15659700
Application: Astro Safari, All Engines
Year: 85-92

Image Coming Soon

**C-252**

Original No: 587575
Application: Chevy, GMC Truck S10 Blazer, S15 Jimmy
Year: 92-93

Application: Olds, Bravada Truck
Year: 91-93

Application: GM Full & Mid-Size
Year: 75-90

Application: Chevy, GMC S-10, Sonoma
Year: 1994

Application: Chevy, GMC Truck, Suburban
Year: 1992

Application: Chevy GMC Truck K10/1500 V10/1500, C6D, C6H, C7D, C7H
Year: 88-92

Application: Chevy, GMC Truck C10/15, R10/15, C20, 25, R20/25
Year: 88-93

Application: Chevy, GMC Truck Blazer, Tahoe, Yukon
Year: 92-95

Image Coming Soon

**C-253**

Original No: 529075
Application: Buick Century
Year: 94-96

Application: Pontiac Sunfire
Year: 95-97

Application: Pontiac Grand Prix
Year: 94-96

Application: Pontiac Grand AM
Year: 94-97

Application: Olds., Cutlass Supreme
Year: 94-97

Application: Olds, Ciera Sedan
Year: 94-96

Application: GM FWD Models
Year: 87-95

Application: Chevy Lumina, Monte Carlo
Year: 94-97

Application: Chevy Cavalier
Year: 1994

Application: Chevy Beretta/ Corsica
Year: 1995

Application: Chevy, GMC Truck S10, Sonoma
Year:92-94

Application: Cadillac Seville
Year: 1992

Application: Buick Skylark
Year: 1994

Application: Buick Regal
Year: 93-96

# GM Products

**C-254**

Original No: 15549298
Application: GM Trucks
Year: 90-92

Image Coming Soon

**C-255**

Original No: 1082
Application: Regal, Lumina, Cutlass, Cutlass Supreme, Grand Prix
Year: 88-94

Image Coming Soon

**C-256**

Original No: 10081648
Application: Beretta, Corsica
Year: 91-92

Application: Corvette
Year: 86-91

Image Coming Soon

**C-257**

Original No: 10081610
Application: Camaro, Firebird
Year: 83-92

Image Coming Soon

**C-259**

Original No: 10178696
Application: Buick, Chevy, Olds., Pontiac
Year: 80-93

# GM Products

Image Coming Soon

**C-260**

Original No: 22577467
Application: Cavalier, Somerset, Regal, Skylark, Achieve Grand AM, Sunbird
Year: 92-93

Image Coming Soon

**C-261**

Original No: 1016
Application: Chevy, GMC Truck C, R, K, V20, 2500
Year: 88-94

Image Coming Soon

**C-262**

Original No: 14063790
Application: Chevy, GMC Truck, C, K, R, V
Year: 88-94

Image Coming Soon

**C-263**
Original No: 94469750
Application: Chevy Spectrum
Year: 85-88

Image Coming Soon

**C-264**

Original No: Fasteners
Application: General Motors
Year: 84-97

Image Coming Soon

**C-265**

Original No: 1083
Application: Pontiac Lemans
Year: 88-91

# GM Products

Image Coming Soon

**C-266**

Original No:
Application:
Year:

Image Coming Soon

**C-267**

Original No: 14086845
Application: Chevrolet, Caprice, Pontiac, Parisiane
Year:84-93

Applicaiton: Buick Estate Wagon
Year: 91-93

Application: olds Custom Cruiser Wagon
Year: 91-92

Image Coming Soon

**C-268**

Original No: 14103951
Application: Regal, Grand Prix, Cutlass Supreme
Year: 90-95

Application: Chevy Lumina
Year: 90-94

Image Coming Soon

**C-269**

Original No: 15638972
Application: Chevy Pickup, C & K Full Size
Year: 90-94

Image Coming Soon

**C-270**

Original No: 14051246
Application: GM Full Size Van, 30S V8
Year: 83-90

**C-271**

Original No: 1060
Application: Chevy Truck, C, R,K,V Series
Year: 87-91

# GM Products

Image Coming Soon

**C-272**

Original No: 10139061
Application: Cutlass, Ciera
Year: 1993

Image Coming Soon

**C-272X**

Original No: 10139061
Application: Cutlass, Ciera
Year: 1993

Image Coming Soon

**C-280**

Original No: 22591227
Application: Skylark, Beretta, Corsica, Achieva, Grand AM
Year: 87-98

Image Coming Soon

**C-281**

Original No: 21006674
Application: Saturn SL, SL1, SL2
Year: 91-92

Image Coming Soon

**C-282**

Application: Chevy, GMC Truck, G10, 20, 1500, 2500 Vans
Year: 1991

Image Coming Soon

**C-283**

Application: Light Duty Truck Chevy, GMC
Year: 88-95

# GM Products

Image Coming Soon

**C-284**

Original No: 1245292
Application: Buick Roadmaster, Chevy Caprice
Year: 94-96

**C-285**

Original No: 15963490
Application: Chevy, GMC T10/15 Truck, Blazer, Jimmy Yukon
Year: 96-97

Image Coming Soon

**C-286**

Original No: 90128514
Application: Pontiac Lemans
Year: 89-93

Image Coming Soon

**C-287**

Application: Skylark, Grand AM, Achieva
Year: 95-97

Application: Sunfire
Year: 93-97

Application: Sunbird
Year: 93-94

Application: Cavalier
Year: 1994

Application: Beretta, Corsica
Year: 1995

Image Coming Soon

**C-288**

Application: Chevy Lumina
Year: 91-92

Application: Grand Prix
Year: 89-96

Application: Cutlass
Year: 91-92

Image Coming Soon

**C-289**

Application: Chevy Lumina
Year: 1991

Application: Grnad Prix
Year: 89-91

Applicaiton: Cutlass
Year: 91-92

# GM Products

Image Coming Soon

**C-290**

Application: Regal, Grand Prix
Year: 95-96

Application: Cutlass
Year: 88-96

Application: Lumina
Year: 90-92

**D-741**

Original No: 2073794
Application: Corvette
Year: 79-82

**D-777**

Original No: 4004270
Application: Chevy, GMC Truck, P20 Series
Year: 80-81

**D-796**

Original No: 6500202
Application: Pontiac Grand Prix, Olds., Cutlass
Year: 1993

**F-317**

Application: Olds., Firenza, Buick, Skyhawk, Chevy Cavalier, Pontiac J-2000, Sunbird
Year: 82-84

Application: Buick Special, Skylark, Grand Sport
Year: 71-72

Application: Riviera
Year: 71-73

Application: Buick Regal, Cadillac Cimarron, Chevy GMC, El Camino, Caballero
Year: 82-87

Applicaiton: Buick Century
Year: 86-89

Application: Olds., F-85, Cutlass
Year: 70-72

Application: Olds., Cutlass
Year: 80-87

Application: Olds., Cleva
Year: 86-90

Application: Pontiac Grand Prix, Bonneville
Year: 80-86

Application: Chevy Malibu, Monte Carlo
Year: 60-88

Appliation: Chevy Full Size
Year: 65-68

# GM Products

**R-828**

Application: Pontiac Phoenix, 6000, Olds., Ciera, Omega
Year: 82-86

Applicaiton: Century, Skylark, Celebrity, Citation
Year: 82-86

Image Coming Soon

**DT-208**

Original No: 2010029R
Application: Chevy Pickup C, R10, 1000, 1500
Year: 88-91

**FT-102**

Application: Pontiac Fiero
Year: 84-87

Image Coming Soon

**U-1026-X**

Application: Buick Regal
Year: 88-95

Application: Pontiac Grand AM, Grand Prix, Oldsmobile Cutlass
Year: 88-93

Application: Chevy Lumina
Year: 90-94

**U-1045**

Application: Chevy Corvair
Year: 60-69

**U-1054**

Original No: Universal
Application: Pontiac
Year: 71-72

# GM Products

**G-80**

Original No: 9030136001
Application: Cadillac Deville
Year: 1994

Application: Cadillac Full Size
Year: 85-93

Application: Chevette
Year: 76-87

Application: Buick, Olds., Cadillac
Year: 85-97

Application: Cutlass, Toronado, Grand Prix
Year: 85-97

Application; Capri
Year: 71-97

Application: Chevy, Lumina, Monte Carlo
Year: 90-97

**G-81**

Original No: 4422885
Application: Cadillac
Year: 89-90

Application: Cutlass Supreme
Year: 89-93

Application: Grand Prix, Lumina
Year: 90-96

**G-99**

Original No: 365536
Application: Chevette
Year: 76-78

Original No: 459979
Application: Chevy Luv Truck
Year: 79-82

Application: Capri
Year: 72-77

**G-103**

Original No: 476871
Application: Chevette, Pontiac T1000
Year: 80-87

**G-105**

Application: Pontiac Grand Prix
Year: 93-94

Application: Olds., Cutlass, Ciera, Buick Century
Year: 93-95

Application: Roadmaster
Year: 94-95
Application; Chevy, Caprice, Impala, Cadillac Fleetwood, Brougham
Year: 1994

# GM Products

**G-106**

Original No: MB059936
Application: Buick Regal, Century, Chevy
Year: 93-96

Application: GMC Truck & Blazer
Year: 90-95

Application: Cadillac Deville
Year: 1994

Application: Chevy Lumina
Year: 88-97

Application: Century, Astro, Safari Van, Olds Cutlass
Year: 92-97

Application: Regal, Grand Prix, Cutlass Supreme
Year: 88-96

Application: Pontiac Grand AM, Sunbird, Olds Achieva
Year: 92-97

Application: Chevy Beretta, Skylark
Year: 92-97

Application: Roadmaster
Year: 94-95

Application: Saturn
Year: 91-92

**G-110**

Application: Buick Century
Year: 1992

Application: Olds Cierra
Year: 89-92

**G-114**

Original No: 2064001A01
Application: Olds Ciera
Year: 93-94

Application: Nova, Chevy II, Sprint, Specturm
Year: 85-88

Application: GEO
Year: 86-93

Application: Saturn All Models
Year: 91-97

**G-118**

Original No: 94222502
Application: Chevy Luv Truck
Year: 81-82

**G-121**

Original No: 96051783
Application: Buick Roadmaster Century, Cadillac Fleetwood Brougham, Chevy Caprice
Year: 93-95

Application: Nova, Sprint
Year: 85-88

# GM Products

**G-129**

Original No: 94132683
Application: Specturm, Nova
Year: 85-89

**G-134**

Original No: 94139494
Application: Spectrum, Nova
Year: 85-89

**G-139**

Application: Grommet for
C-240

**G-144**

Original No: 90234172
Application: Lemans
Year: 88-93

**G-145**

Application: Corvette
Year: 92-94

**G-148**

Application: Cadillac Eldorado,
Seville
Year: 1993

Application: Deville
Year: 1994

# GM Products

**G-149**

Application: Pontiac Lemans
Year: 88-93

**G-154**

Application: Chevy Spectrum
Year: 85-88

**G-167**

Original No: 15644671
Application: Chevy Truck, S10 Blazer, Jimmy, Sonoma, Yukon, G10, 20 Van
Year: 90-94

**G-169**

Original No: 22577472
Application: Chevy, Buick, Olds, Cadillac
Year: 85-95

Image Coming Soon

**G-170**

Original No: 10095400
Application: Chevy, Lumina, Pontiac Transport, Olds Silhouette
Year: 90-95

Image Coming Soon

**G-172**

Original No: 10158003
Application: Corvette
Year: 89-95

# GM Products

**G-176**

Original No: 10139009
Application: Buik, Century, olds Seria, Pontiac 6000
Year: 91-92

Image Coming Soon

**G-177**

Original No: 10185199
Application:
LuminaGrand Prix
Year: 93-96

**G-178**

Original No: 15641364
Application: Chevy Blazer S10, 15 Suburban
Year: 91-92

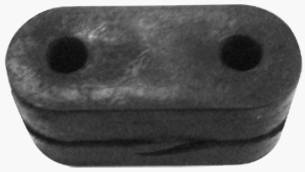

**G-189**

Application: Chevy Truck Luv
Year: 81-82

Image Coming Soon

**O-538**

Original No: 588262
Application: Buick Special, Olds F-85
Year: 61-63

Original No: 578295
Application: Corvette
Year: 69070

Image Coming Soon

**O-553**

Original No: 39440
Application: Oldsmobile
Year: 67-70

# GM Products

**O-554**

Original No: 388050
Application: Oldsmobile
Year: 66-70

Image Coming Soon

**G-558**

Original No: 414136
Application: Chevy Monza
Year: 76-79

Application: Pontiac Sunbird
Year: 1978

Applicaiton: Olds, 88, 98, Custom Cruiser
Year: 73-75

Applicaiton: Chevy & GMC Truck P20, P25, P30, P35
Year: 79-81

**O-559**

Original No: 416247
Application: Toronado
Year: 1978

Image Coming Soon

**P-432**

Original No: 5372205
Application: Pontiac Riviera
Year: 71-73

Original No: 9779701

Original No: 9777273

Original No: 9780258

Original No: 1235849

**P-433**

Original No: 9777302
Application: Pontiac
Year: 65-70

Original No: 9783813

Original No: 9775854

Image Coming Soon

**P-435**

Original No: 9783801
Application: Pontiac
Year: 66-70

Application: Buick Regal
Year: 90-95

# GM Products

Image Coming Soon

**P-437**

Original No: 9783800
Application: Pontiac
Year: 66-70

Image Coming Soon

**P-440**

Original No: 492999
Application: Chevette, Monte Carlo, GMC Truck, Sprint, Grand Prix, Lemans, GTO
Year: 73-74

Image Coming Soon

**P-441**

Original No: 491762
Application: Pontiac, Grand Prix, Lemans, GTO
Year: 1973

Image Coming Soon

**P-444**

Original No: 493485
Application: Pontiac
Year: 1974

Image Coming Soon

**P-446**

Original No: 9028428627
Application: Lemans
Year: 88-92

# GEO

**IS-250**

Application: GEO Spectrum
Year: 85-89

**G-114**

Original No: 2064001A01
Application: GEO Metro,
Prizm, Storm Tracker
Year: 89-93

**G-121**

Application: GEO Tracker
Year: 93-94

Application: GEO Prizm, Metro
Year: 89-97

Application: GEO Metro
Year: 95-97

**G-145**

Original No: 1756515050
Application: GEO Prizm
Year: 89-97

**G-149**

Original No: 90234172
Application: GEO Prizm
Year: 89-92

**G-154**

Application: GEO Spectrum
Year: 1989

# GEO

**G-155**

Original No: 94332331
Application: GEO Storm
Year: 90-93

**F-365**

Original No: EOSZ-5260B
Application: Civic Station Wagon
Year: 84-86

**H-1301**

Original No: 18215SS0131
Application: Acura Legend
Year: 86-90

Application: Accord
Year: 86-89

Image Coming Soon

**H-1302**

Original No: 18213-SH3-J00
Application: Civic Hatch Back
Year: 88-95

Application: CRX, HF, 4 Cylinders
Year: 88-91

Application: Civic, VX, CX
Year: 92-97

**G-92**

Original No: 18215671000
Application: Accord, Civic, Prelude
Year: 76-97

**G-94**

Original No: 18215659010
Application: Civic, CVCC
Year: 75-80

# GEO

**G-99**

Application: Honda Passport
Year: 94-97

**G-106**

Application: Honda Civic
Year: 93-97

**G-102**

Original No: 18234634940
Application: Civic
Year: 73-79

**G-110**

Original No: 82155SA0960
Application: Accord DX, LS
Year: 92-97

Application: Accord, Civic,
Prelude, CRX
Year: 82-96

**G-114**

Original No: 2064001A01
Application: Accord, Civic,
Prelude
Year: 92-97

Application: Truck Odyssey
Year: 95-97

**G-115**

Original No: 111440160
Application: Honda
Year: 84-87

# Honda

**G-121**

Application: Honda Prelude
Year: 93-94

**G-127**

Original No: 18215SB6000
Application: Civic Station Wagon
Year: 84-87

**G-138**

Application: Honda Prelude
Year: 92-94

**G-142**

Application: Honda Passport
Year: 94-97

**G-148**

Original No: 182155SE0000
Application: Accord
Year: 88-95

Application: Civic
Year: 92-97

Application: Prelude
Year: 92-94

**G-154**

Application: Honda Civic, CRX
Year: 89-91

Application: Honda Accord
Year: 90-92

# Honda

**G-160**

Original No: 18206659000
Application: Accord, Prelude
Year: 79-80

**G-166**

Original No: 18215SSOJ31
Application: Honda Prelude SI
Year: 1992

**DT-207**

Application: Hyundai Excel
Year: 86-90

**G-106**

Original No: MB059936
Application: Scoupe
Year: 91-94

Application: Sonata
Year: 90-94

Application: Excel
Year: 86-94

Application: Elantra
Year: 92-95

Application: Accent
Year: 95097

**G-110**

Application: Sonata
Year: 1994

**G-114**

Original No: 2064001A01
Application: Scoupe
Year: 91-92

# Hyundai

**G-121**

Application: Sonata
Year: 89-93

Application: Scoupe
Year: 1994

Application: Excel
Year: 90-92

Application: Elantra
Year: 93-95

Application: Accent
Year: 95-97

# IHC

**F-295**

Application: IHC Truck Scout II
Year: 71-77

# Infinity

**G-84**

Application: Infinity M30
Year: 90-92

**G-121**

Application: Infinity Truck
Year: 1997

Application: Q45
Year: 90-92

Application: J30
Year: 93-94

Application: G20
Year: 93-95

# ISUZU

**IS-250**

Original No: 894108716263
Application: Isuzu I Mark
Year: 85-89

Image Coming Soon

**IS-251**

Original No: 1046
Application: Isuzu Trooper
Year: 89-91

# ISUZU

Image Coming Soon

**IS-252**

Original No: 894231188455
Application: Isuzu Impulse
Year: 83-87

**G-90**

Original No: MB009776
Application: Isuzu Pickup
Year: 1990

**G-91**

Original No: 9030133001
Application: Isuzu
Year: 81-84

**G-93**

Original No: 8870207
Application: Isuzu
Year: 76-79

**G-99**

Original No: 9420718
Application: Trooper
Year: 90-91

Applicaiton: Trooper II
Year: 87-90

Application: Pickup
Year: 81-94

Application: Opel
Year: 76-79

**G-114**

Original No: 2064001A01
Application: Isuzu I Mark
Year: 85-87

# ISUZU

**G-118**

Original No: 94222502
Application: Isuzu Truck
Year: 81-92

**G-134**

Original No: 8941394940
Application: Isuzu, Isuzu I Mark
Year: 87-89

**G-142**

Application: Isuzu I Mark
Year: 85-88

Application: Impulse
Year: 91-92

Application: Stylus
Year: 91-93

**G-148**

Application: Isuzu Rodeo
Year: 91-97

Applicaiton: Stylus
Year: 91-93

**G-155**

Application: Trooper
Year: 89-91

Applicaiton: Rodeo
Year: 91-92

Application: Amigo
Year: 89-92

Application: Stylus
Year: 91-93

Application: pickup
Year: 88-92

**G-154**

Original No: 9365404
Application: Isuzu Impulse, I Mark
Year: 83-89

Application: Trooper II
Year: 89-91

# ISUZU

**G-189**

Application: Isuzu Pickup
Year: 81-84

Applicaiton: Isuzu
Year: 76-78

# Jaguar

**G-168**

Original No: CAC-2751
Application: Jaguar XJ 6
Year: 83-88

**G-173**

Original No: CBC-009103
Application: Jaguar Sedan
Year: 88-94

# Jaguar

Image Coming Soon

**G-175**

Original No: CBC-6514
Application: Jaguar Sedan
Year: 88-94

# JEEP

Image Coming Soon

**J-011**

Original No: 534074
Application: Cherokee, Wagoneer, Pickup, Glad
Year: 76-96

Image Coming Soon

**J-012**

Original No: 5353052
Application: Cherokee, Wagoneer, Pickup, Glad
Year: 74-78

# JEEP

Image Coming Soon

**J-013**

Original No: 5357043
Application: Cherokee, Wagoneer
Year: 77-82

Original No: 5363087

Image Coming Soon

**J-014**

Original No: 5353523
Application: Cherokee, Wagoneer, Comando
Year: 87-89

Application: Jeep Gas Engine
Year: 86-92

Application: Grand Wagoneer
Year: 87-92

Application: Cherokee, Wagoneer, Grand WAgoneer
Year: 80-92

Image Coming Soon

**J-015**

Original No: 5363891
Application: Jeep
Year: 86-88

Image Coming Soon

**J-016**

Original No: 5362502
Application: Jeep
Year: 86-88

**F-295**

Original No: 5351929
Application: Jeep
Year: 873-87

**C-229**

Original No: 25514991
Application: Cherokee, Wagoneer, Pickup, Commanche
Year: 86-92

# JEEP

**C-232**

Application: Jeep Cherokee,
Wagoneer Sport Wagon
Year: 84-86

Image Coming Soon

**IS-252**

Application: Jeep Cherokee,
Wagoneer, Sport Wagon
Year: 84-86

**G-106**

Application: Jeep Truck
Wrangler
Year: 87-92

Application: Jeep Grand
Cherokee
Year: 96-97

**G-150**

Original No: 2065001B01
Application: Wrangler
Year: 87-93

**G-157**

Original No: 52040219
Application: Wrangler
Year: 87-93

# LEXUS

**G-80**

Application: Lexus LS400
Year: 90-94

**G-106**

Application: Lexus LS400
Year: 90-93

**G-121**

Application: Lexus SC400,
ES300, SC300
Year: 92-93

Application: LS400, G330
Year: 93-94

Application: ES250
Year: 90-91

# Mercedes

**G-80**

Original No: 9030136001
Application: Mercedes Benz 190E
Year: 84-93

Application: Mercedes Benz 260E
Year: 87-89

Application: Mercedes Benz 420, SEL., 560, 300E
Year: 86-89

Application: 300 Station WAgon
Year: 82-85

**G-81**

Original No: 1124920282
Application: Mercedes Benz
Year: 59-83

Application: Mercedes Benz 560 SL
Year: 88-89

**G-118**

Original No: 94222502
Application: Benz 420 SEL
Year: 86-89

Application: Benz 560
Year: 86-90

**G-120**

Original No: 1134820082
Application: Mercedes Benz
Year: 82-85

**G-140**

Application: Mercedes Benz
Year: 88-97

**G-162**

Original No: 2014920116
Application: Mercedes Benz 190, 300E, 300TE, 300D, 300CE
Year: 88-93

Application: Benz 1900 Diesel
Year: 84-92

Application: Mercedes Benz E320
Year: 94-97

# Mercedes

**G-189**

Application: Mercedes Benz 560 SEC, 560SEL, 400SEL
Year: 86-90

Application: 500DE
Year: 91-92

Application: 300D
Year: 90-93

Applicaiton: 300CE, 300D, 300E
Year: 88-93

Application: 190 E
Year: 89-93

Application: E300
Year: 1993

Image Coming Soon

**M-1101**

Original No: N32840060
Application: Mazda
Year: 86-88

Image Coming Soon

**M-1102**

Original No: FE2040190A
Application: Mazda B2600 Pickup
Year: 90-93

Image Coming Soon

**M-1103**

Original No: F28040100
Application: Mazda Truck, B2600 Pickup
Year: 89-93

Image Coming Soon

**M-1104**

Original No: F27940100
Application: Mazda Truck, B2200 Pickup
Year: 86-93

Application: Mazda truck, B2600 Pickup
Year: 89-93

Application: Mazda Truck, B2000 Pickup
Year: 86-87

# Mercedes

Image Coming Soon

**M-1105**

Application: Mazda GLC
Sedan, Hatch Back
Year: 1985

**F-359**

Original No: 3840-030
Application: Mazda GLC,
Mazda Truck
Year: 79-84

**F-366**

Original No: D77Z-5260D
Application: Mazda Truck
Year: 77-84

**F-394**

Original No: D87Z-5260 B
Application: Mazda Truck
B2000 Pickup
Year: 79-84

**D-801**

Application: Mazda Truck
Navajo
Year: 89-91

**G-80**

Original No: 17507-45010
Application: Mazda
Year: 71-89

# Mercedes

**G-89**

Application: Mazda Truck
Year: 79-84

Application: GLC Station Wagon
Year: 79-83

**G-91**

Original No: 9030133001
Application: MAzda RX7
Year: 81-92

**G-92**

Original No: E30140061A
Application: Mazda
Year: 81-87

**G-102**

Application: Mazda Truck
Year: 74-84

**G-104**

Original No: 184540060
Application: Mazda GLC,
Mazda Truck
Year: 77-84

**G-105**

Original No: 644015220
Application: Mazda
Year: 83-87

Application: Truck Van
Year: 89-94

Application: MPV
Year: 1992

Application: 929
Year: 92-95

# Mercedes

**G-106**

Application: Mazda Truck
Year: 85-93

Applicatoin: 626, 929
Year: 83-92

Application: RX7
Year: 86-93

**G-113**

Original No: FE21-40-061
Application: Mazda
Year:  87-93

Original No: FE20-40-061

**G-114**

Application: Mazda 323, Portage GXE
Year: 81-94

Application: Miata MX-5
Year: 90-95

**G-115**

Original No: 111440161
Application: Mazda RX7
Year: 78-82

**G-119**

Original No: 1114400610
Application: Mazda RX3, RX4
Year: 74-78

Original No: N225-40-61
Application: Mazda
Year: 74-79

**G-121**

Application: Mazda Protege, Millenia Sedan
Year: 1995

Application: MX-6, 626
Year: 94-96

# Mercedes

**G-125**

Original No: 075-6CP-69
Application:Mazda RX7
Year: 78-79

**G-131**

Original No: N304-40-161A
Application: Mazda New Body Style
Year: 86-88

**G-142**

Original No: E7GZ-5F262A
Application: Mazda MX6, 626
Year: 88-92

Application: Mazda Miata MX5, Protege 323
Uear: 90-92

Application: Mazda Van
Year: 89-92

**G-145**

Application: Mazda Protege
Year: 1995

**G-147**

Application: Mazda 929
Year: 92-95

Application: RX7
Year: 1993

Application: Pickup
Year: 85-93

**G-148**

Application: Mazda Truck MVP
Year: 1993

Application: 626, MX6
year: 93-97

Application: RX7
Year: 87-91

Application: MX3
Year: 92-94

# MG

Image Coming Soon

**MG-800**

Original No: GEX-7251
Application: MG, MGB, BT
Year: 62-74

Image Coming Soon

**MG-801**

Original No: GEX-7182
Application: MG, MGB, BT
Year: 62-80

Image Coming Soon

**MG-802**

Application: MG, MGB, MGBGT
Year: 69-80

# Mitsubishi

**C-209**

Original No: 25501936
Application: Cordia, Tredia
Year: 83-87

Application: Mirage
Year: 85-89

**G-80**

Original No: 9030136001
Application: Galant
Year: 85-92

Application: Eclipse
Year: 90-94

**G-81**

Original No: 1124920282
Application: Mitsubishi
Year: 83-87

**G-91**

Original No: 9030133001
Application: Mitsubishi, Cordia, Tredia, Starion
Year: 83-94

Application: Mirage
Year: 85-94

**G-106**

Original No: MB059936
Application: Precis
Year: 87-92

Application: Eclipse
Year: 90-97

Application:  Cordia, Tredia
Year: 83-87

Application: Galant
Year: 85-90

Application: Mirage
Year: 85-96

Application: Picup
Year: 90-96**G**

# Mitsubishi

**G-110**

Original No: 821555A0960
Application: Mitsubishi Truck
Year: 87-92

**G-114**

Original No: 206400A01
Application: Eclipse
Year: 89-94

Application: Mirage, Galant
Year: 89-92

**G-121**

Application: Mitsubishi 3000GT
Year: 91-92

Application: Mirage
Year: 87-96

Application: Eclipse, Galant, Precis
Year: 87-97

Application: Diamante
Year: 92-96

Application: Expo LRV
Year: 1993

**G-138**

Original: MB431175
Application: Mitsubishi Truck, Montero
Year: 87-94

Application: Pickup
Year: 87-96

Application: 3000GT
Year: 1994

**G-150**

Original No: 2065001B01
Application: Galant
Year: 89-92

Application: Precis
Year: 87-92

Application: Truck
Year: 90-92

# Mitsubishi

**G-152**

Original No: MB48707
Application: Mitsubishi Truck
Year: 87-92

**G-154**

Application: Mitsubishi Mirage
Year: 1995

**G-179**

Original No: MB514063
Application: Mitsubishi Truck
Year: 87-94

Application: Galant
YEar: 94-97

**G-80**

Original No: 825711
Application: Opel1900
Year: 69-75

**G-93**

Original No: 8870207
Application: Opel, Isuzu
Year: 1979

**G-96**

Application: Opel Kadett,
Rallye
Year: 67-72

# Mitsubishi

**G-97**

Original No: 856507
Application: Opel Kadett
Year: 63-75

**G-99**

Original No: 9420718
Application: Opel, Isuzu
Year: 76-86

**G-189**

Application: Opel
Year: 76-78

# Peugeot

**C-220**

Original No: 25511784
Application: SO4 Diesel, Station Wagon
Year: 80-83

**D-801**

Application: Peugeot 4OS
Year: 89-91

**G-141**

Original No: 175522
Application: Peugeot 5O5 Sedan
Year: 87-88

Application: 504 Wagon
Year: 75-83

# Porsche

Image Coming Soon

**PT-700**

Original No: 477-253-325A
Application: Porsche 924
Year: 79-89

# Renault

Image Coming Soon

**RT-300**

Original No: 7700672318
Application: Renault RS
Year: 76-84

**G-80**

Original No: 9030136001
Application: Renault
Year: 71-85

**G-114**

Application: Renault 181
Year: 81-83

Application: Fuega
Year: 82-83

**G-123**

Original No: 8932001396
Applicaton: Renault 181
Station Wagon
Year: 80-87

**G-124**

Original No: 7700677733
Application: Alliance, Encore
Year: 83-87

# SAAB

**G-80**

Original No: 9030136001
Application: Saab 99
Year: 69-74

**G-93**

Original No: 94206807
Application: Saab
Year: 69-80

**G-115**

Original No: 111440161
Application: Saab
Year: 81-87

**G-122**

Original No: 83-86-476
Application: Saab, 9000
Year: 70-93

Original No: 93-17-796
Application: Saab 900
Year: 84-97

Original No: 93-28-105

**G-149**

Application: Saab 9000
Year: 92-93

**G-154**

Original No: 93-65-404
Application: Saab 900, 900S Turbo
Year: 83-97

# SAAB

**H-1301**

Application: Sterling
Year: 87-88

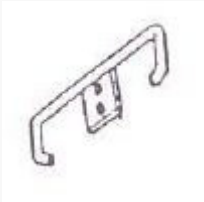

**G-92**

Original No: 18215671000
Application: Sterling
Year: 87-89

**G-114**

Original No: 2064001A01
Application: Sterling
Year: 87-92

**G-148**

Application: Sterling 825
Year: 87-89

# Subaru

**G-80**

Original No: 1750745010
Application: Subaru
Year: 72-74

**G-105**

Original No: 6440-15220
Application: Subaru
Year: 75-97

**G-114**

Original No: 2064001A01
Application: Subaru
Year: 87-90

**G-121**

Application: Subaru Impreza,
Legacy
Year: 95-96

Image Coming Soon

**G-151**

Original No: 44031GA090
Application: Subaru Wagon
Year: 85-89

# Suzuki

**G-114**

Original No: 1756515010
Application: Suzuki
Year: 89-92

**G-121**

Original No: 14281-79019
Application: Swift, Legacy
Year: 85-97

Applicaiton: Suzuki, Turbo, Sprint
Year: 87-96

Application: Sidekick Truck
Year: 92-93

Applicaiton: Samurai Truck
Year: 85-94

Applicaiton: Justy
Year: 87-94

# Thomas Truck

Image Coming Soon

**TT-1401**

Original No: 6Z240Z59
Application: Thomas Truck,
School Bus w/ Cat. 3208,
3208T (rear engine)
Year: 84-93

# Toyota

**TO-503**

Original No: 170531010
Application: Toyota Truck
Year: 79-90

**TO-504**

Application: Toyota Truck
Clamp
Year: 84-88

**C-215**

Application: Toyota Truck 4
Runner
Year: 88-95

**U-1115**

Application: Land Cruiser
Year: 76-79

**G-80**

Original No: 17507-45010
Application: Cavina, Calica
Year: 78-91

Original No: 17565-41010
Application: Corona
Year: 73-92

Application: Starlet
Year: 81-84

Applicaiton: Hi-Lux Truck
Year: 75-78

Application: Tercel
Year: 83-88

Application: Carina
Year: 71-73

Application: Corolla
Year: 73-87

Application: Cressida
Year: 84-92

Application: Truck Van
Year: 84-87

Application: Supra
Year: 79-94

# Toyota

Image Coming Soon

**G-81**

Original No: 1124920282
Application: Cressida
Year: 87-88

Image Coming Soon

**G-90**

Original No: 9031-01211
Application: Celica
Year: 78-86

Application: Corona
Year: 79-81

Applicaiton: Starlet
Year: 81-84

Applicaiton: Cressida
Year: 78-84

**G-91**

Original No: 903-01-33001
Application: Hi-Lux Truck
Year: 76-90

Application: Corolla
Year: 76-87

Image Coming Soon

**G-101**

Original No: 17563-31090
Application: Toyota Truck
Year: 86-97

Image Coming Soon

**G-102**

Original No: 18234634940
Application: Toyota Truck
Year: 90-91

**G-106**

Original No: MBO59936
Application: Celica
Year: 75-91

Application: Cressida
Year: 85-90

# Toyota

Image Coming Soon

**G-112**

Original No: 823252147A
Application: Toyota Truck
Year: 84-85

**G-114**

Original No: 2064001A01
Application: Toyota Truck
Year: 86-93

Application: Camry, Cressida, Celica, Corolla
Year: 87-94

Image Coming Soon

**G-117**

Original No: E3TZ-5260A
Application: Toyota Truck, Van
Year: 86-90

**G-121**

Original No: 17565-15010
Application: Celica, Corolla, Tercel, Tamera
Year: 82-97

Application: Tamera
Year: 82-97

Application: Pick Up, T100, 4 Runner
Year: 93-97

Image Coming Soon

**G-128**

Application: Toyota Truck Rava
Year: 96-97

Image Coming Soon

**G-135**

Original No: 17566-35010
Application: Toyota Corolla, Celica
Year: 88-97

# Toyota

Image Coming Soon

**G-145**

Original No: 17565-15050
Application: Toyota, Corolla, Sedan
Year: 88-92

Image Coming Soon

**G-150**

Original No: 2065001B01
Application: Toyota Truck, Van, Wagon
Year: 1987

Image Coming Soon

**G-153**

Original No: 90-1LT-602-4A
Application: 4 Runner Pickup
Year: 88-95

Application: Pickup
Year: 89-93

Image Coming Soon

**G-159**

Original No: 17561-74110
Application: Previa
Year: 90-94

Application: Celica
Year: 94-97

# Triumph

**FT-100**

Original No: UKC-5050
Application: TR-7
Year: 72-82

**FT-101**

Original No: UKC-2274
Application: TR-7
Year: 74-82

**FT-102**

Original No: 105292
Application: GT-6, TR-6, TR-250, Spitfire
Year: 65-81

**U-1026 UPPER**

Application: Triumph
Year: 68-74

Image Coming Soon

**G-98**

Original No: GEX-7487
Application: TR-7
Year: 75-84

# Volkswagon

**VO-400**

Original No: 9039251521
Application: V.W. Transporter
Year: 75-85

**VO-401**

Original No: 176253143
Application: 2” Clamp

**G-80**

Original No: 9030136001
Application: Golf, Jetta
Year: 85-92

Image Coming Soon

**G-81**

Original No: 1124920282
Application: Jetta
Year: 80-90

Image Coming Soon

**G-90**

Original No: 90301-01211
Application: Cabriolet
Year: 90-93

Application: Golf, Jetta
Year: 84-95

Application: Quantum
Year: 86-91

Application: Rabbit, Scirocco
Year: 75-84

Application: Rabbit Truck
Year: 1980

**G-106**

Application: VW Jetta, Golf
Year: 93-97

Application: VW Corrado
Year: 92-94

# Volkswagon

Image Coming Soon

**G-107**

Application:  Rabiit, Cabriolet, Scirocco
Year: 85-93

Image Coming Soon

**G-112**

Original No: 823253147A
Application: Dasher
Year: 74-81

Application: Rabbit, Scirocco
Year: 77-86

Application: Rabbit Diesel
Year: 77-92

Application: VW Truck
Year: 80-83

Application: Golf
Year: 85-88

Application: Jetta
Year: 83-92

Application: Fox
Year: 87-93

Image Coming Soon

**G-158**

Original No: 255-809
Application: Colt, Jetta
Year: 90-92

# Volkswagon

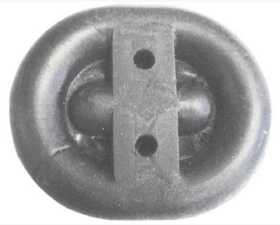

**G-189**

Application: VW Truck Type II Van Wagons
Year: 72-79

Application: VW Rabbit Pickup
Year: 80-81

Application: VW Rabbit, Scirocoo
Year: 75-84

VW Quantum, Golf, Fox, Cabriolet
Year: 92-93

Application: VW Jetta
Year: 82-92

Application: VW Dasher
Year: 74-81

Application: VW Corrado
Year: 90-91

# Volvo

**OL-900**

Original No: 676018
Application: Volvo 142, 144, 145, Volvo 164
Year: 68-73

Original No: 679113
Year: Volvo 140
Year: 71-74

**OL-901**

Application: Universal Stud Hanger
Year: 74-75

# Volvo

**OL-902**

Original No: 3507097-8
Application: 9-34x4 Oval Muffler

Original No: 3507103-4
Application: Volvo 740, 760, 780, 940, 960 Turbo
Year: 91-95

**OL-903**

Original No: 3507097-8
Application: 9x4 Oval Muffler

Original No: 3507103-4
Application: Volvo 740, 760, 780, 940, 960 Turbo
Year: 91-95

**OL-904**

Original No: 1378821
Application: Volvo 740, 760, 940

Original No: 1273841
Application: 960 Turbo

Original No: 1330112
Year: 83-95

**OL-905**

Original No: 1271256-8
Application: Volvo 740, 760, 940
Year: 88-92

**OL-906**

Original No: 1271261-8
Application: Volvo 940 4CYL
Year: 91-93

Application: Volvo 760, 780 4&6 CYL
Year: 88-92

**OL-907**

Original No: 1378313
Application: Volvo 740, 760
Year: 88-92

Original No: 3507114

# Volvo

**OL-908**

Original No: 1332325-8
Application: Volvo
Year: 88-96

**OL-909**

Original No: 3514919-4
Application: Volvo
Year: 88-92

Original No: 3514922-8

**OL-910**

Original No: 1271259-2
Application: Volvo
Year: 88-92

**G-82**

Original No: 666407
Application: Volvo
Year: 62-93

Image Coming Soon

**G-84**

Original No: 1206468
Application: Volvo
Year: 74-93

Image Coming Soon

**G-93**

Original No: 94206807
Application: Volvo 740
Year: 85-87

# Volvo

Image Coming Soon

**G-95**

Original No: 667503
Application: Volvo 740
Year: 85-87

Image Coming Soon

**G-96**

Original No: 676184
Application: Volvo 140, 164
Year: 69-84

Image Coming Soon

**G-140**

Original No: 1329646-2
Application: Volvo 800-900
Year: 87-96

Original No: 1329646-0

# Yugo

Image Coming Soon

**G-128**

Original No: 4296059

Application: Yugo

Year: 86-89

Viking Inc.  PO Box 130 Columbia City, IN
phone: 260.244.6141  fax: 260.244.6124  or email us at: steve@vikinginc.com

VIKING